HIGH VOLTAGE CONNECTORS FOR SPECIAL APPLICATIONS

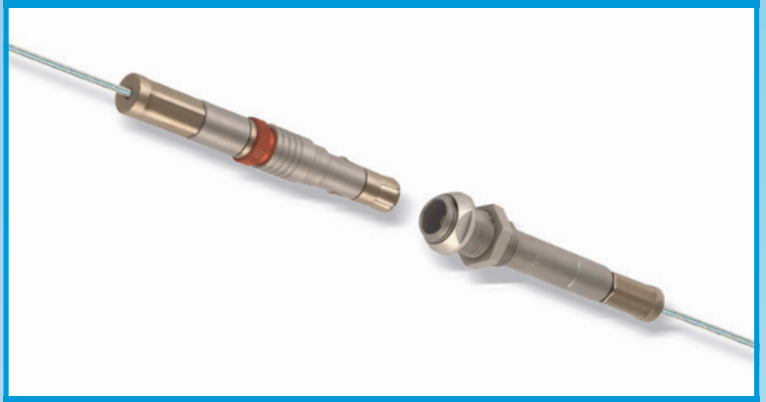

05 Series

5G Series

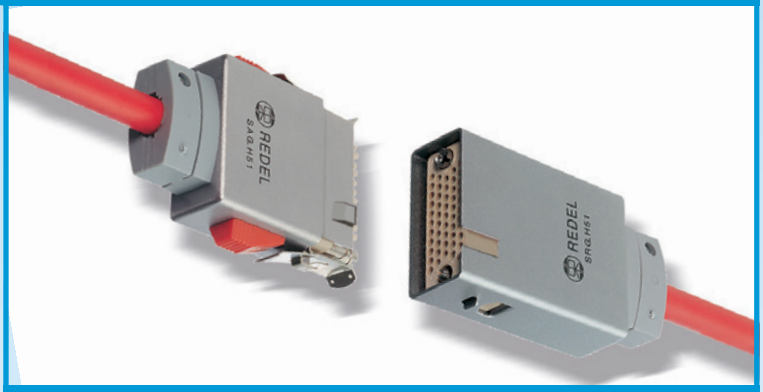

K and S Series

No reproduction or use without express permission of editorial or pictorial content, in any manner.
LEMO reserve the right at all times to modify and improve specifications without any notification.

05 Series Connectors

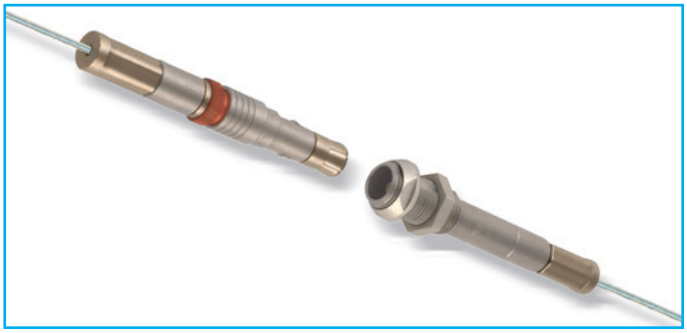

High voltage connectors of the new 05 miniature series have been specifically developed to meet the requirements of experimental nuclear research programme.
The 05 series contains a miniature HV 12kV d.c. (test voltage) contacts. This crimp contact is removable from the shell and is inserted in a PEEK insulator.
The actual mating is provided by the LEMO Push-Pull system, renowned for its reliability worldwide and a red safety nut to secure the connection.
The compact design of these connectors makes them ideal for applications where minimal mass and space saving are critical factors.

Interconnections

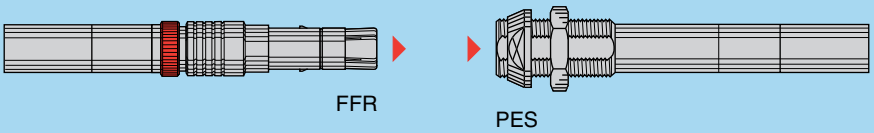

LEMO's Push-Pull Self-Latching Connecting System

This self-latching system is renowned worldwide for its easy and quick mating and unmating features. It provides absolute security against vibration, shock or pull on the cable, and facilitates operation in a very limited space.

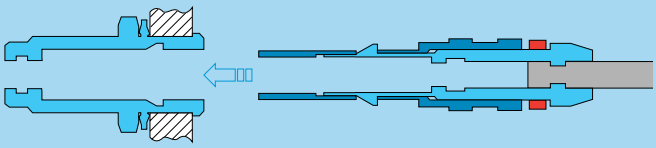

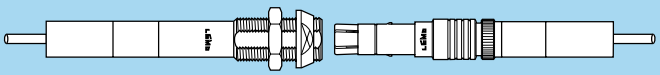

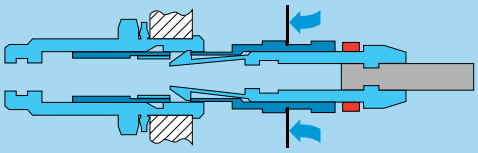

The LEMO self-latching system allows the connector to be mated by simply pushing the plug axially into the socket.

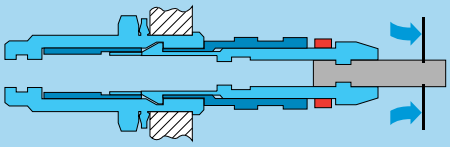

Once firmly latched, connection cannot be broken by pulling on the cable or any other component part other than the outer release sleeve.

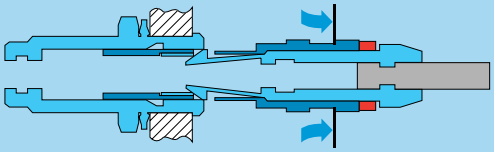

When required, the connector is disengaged by a single axial pull on the outer release sleeve. This first disengages the latches and then withdraws the plug from the socket.

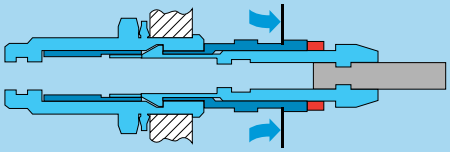

For added security a safety nut (shown in red) can prevent disengagement by blocking the motion of the outer release sleeve.

Part Section Showing Internal Components

Connector

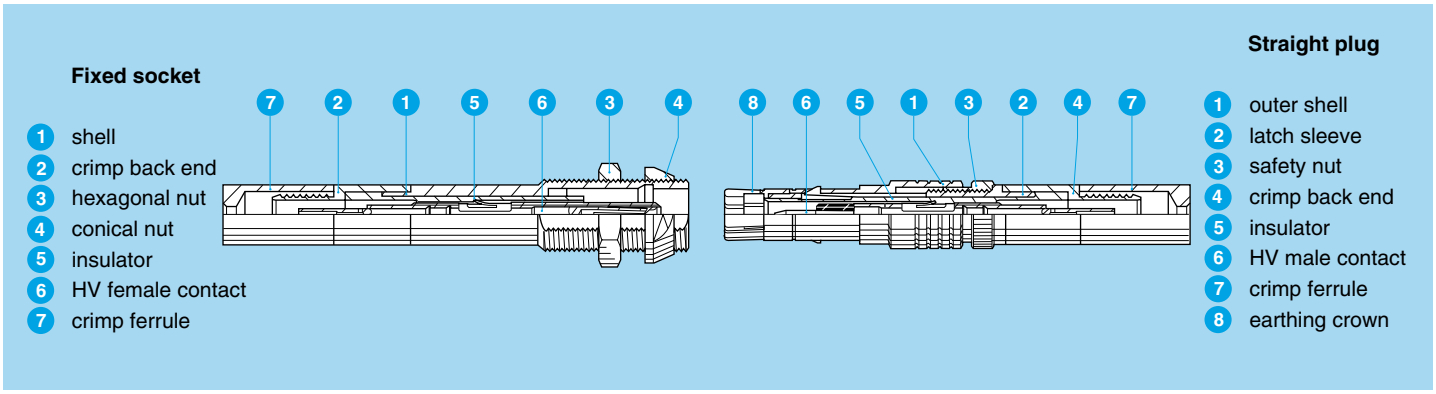

HV Contact

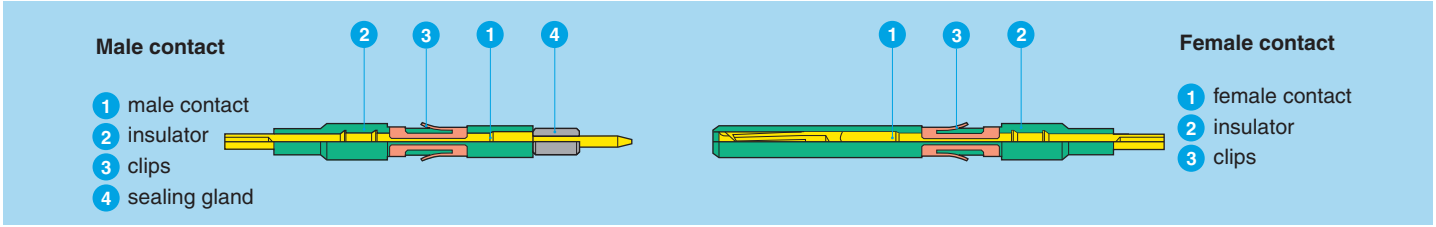

Technical characteristics

Mechanical and climatical

Characteristic	Value	Standard
Contact retention force	40 N	IEC 60512-8 test 15a
Working temperature	-20 °C to +125°C	
Mechanical life	> 200 cycles	IEC 60512-5 test 9a
Climatic class	20/125/21	IEC 60068-1
Radiation resistance	> 10^6 Gy	

Electrical characteristics

Characteristic	Value	Standard
Test voltage d.c.[1)]	12 kV (1 min.)	IEC 60512-2 test 4a
Rated current	4 A	IEC 60512-3 test 5a
Contact resistance	≤ 8 mΩ	IEC 60512-2 test 2a
Screen resistance	≤150 mΩ	IEC 60512-2 test 2f
Insulation resistance	≥ 10^{12} Ω	IEC 60512-2 test 3a

Note:
[1)] specific assembly instructions shall be respected. (see page 6 and 7)

Materials and Treatment – Connector

Component	Material (standard)	Surface treatment (µm)
		Ni
Outershell + crimpend	Aluminium (AA 6012)	5
Safety nut	Aluminium (AA 6012)	Anodized red
Earthing crown	Aluminium special	5
Latch sleeve	Aluminium special	5
Hex and conical nut	Aluminium (AA 6012)	Anodized natural
Insulator	PEEK	–
Crimp ferrule	Aluminium (AA 6012)	5

Contact

Component	Material (standard)	Surface treatment (µm)		
		Cu	Ni	Au
Male contact	Brass (UNS C38500)	0.5	3	1.0
Female contact	Bronze (UNS C54400)	0.5	3	1.5
Contact clips	Cu-Be (QQ-C-530)	–		
Insulator	PEEK	–		
Sealing gland	Silicone PVMQ	–		

Models

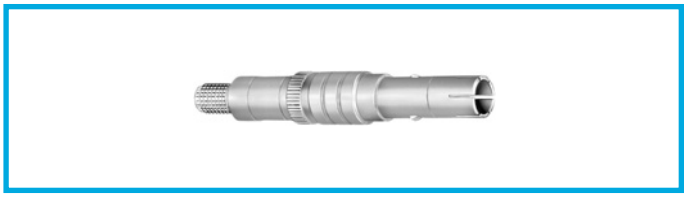

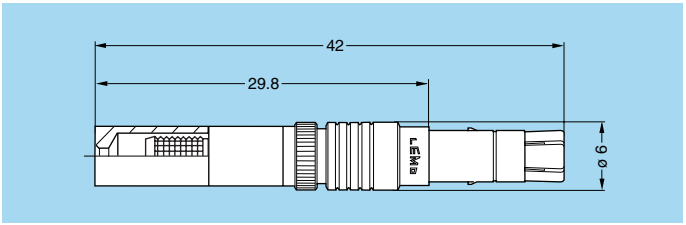

FFR Straight plug for cable crimping, with safety nut

Part Number	Cable group
FFR.05.403.LLAE141	1
FFR.05.403.LLAE142	2

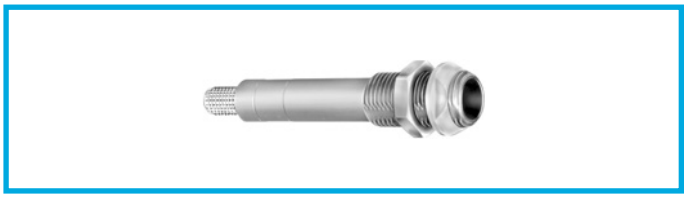

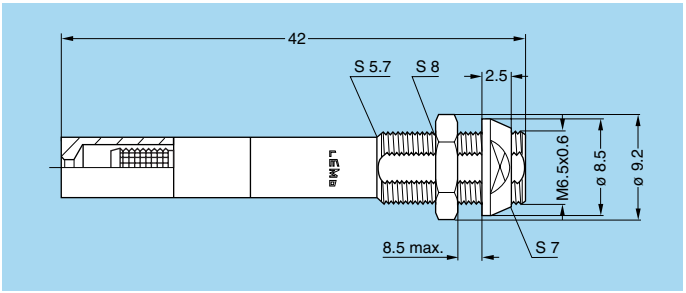

PES Fixed socket, with two nuts, for cable crimping

Part Number	Cable group
PES.05.403.LLLE141	1
PES.05.403.LLLE142	2

Recommanded high voltage cables

Cable group	Manufacturer Part Number	CERN Type	Construction and dimensions								
			Conductor			Dielectric		Screen	Sheath		Corona screen
			Constr.	Mat.	ø	Mat.	ø	Mat.	Mat.	ø	
1	ABBNK - 45/94	HTC 50-1-1	7x0.17	CuSn	0.51	PE solid	1.5	CuSn 16x4x0.1	Polyo-lefine	3.3	yes
2	HABIA 31789-004-001	HFI 150 mini coax	Mono	Cu	0.16	HFI 150	0.5	Drain 2x0.1 + Alu polyester	HFI 150	1.15	no

Accessories

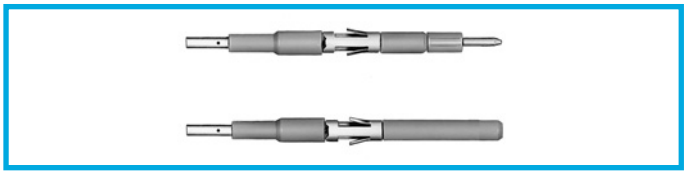

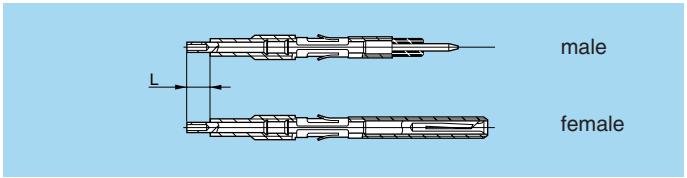

FFA-ERA High Voltage Contacts

Contact Part Number		Cable group	L (mm)
Male contact	Female contact		
FFA.05.403.ZLA1	ERA.05.403.ZLL1	1	4
FFA.05.403.ZLA2	ERA.05.403.ZLL2	2	6

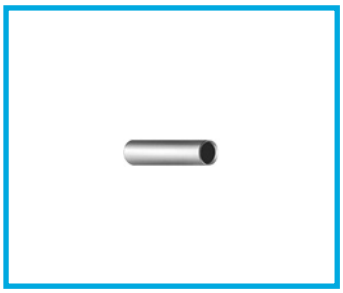

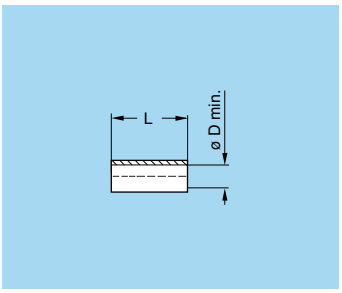

GMA Heatshrink tube

Shall be ordered separately

Part number	Cable group	Supplier		øD (mm)	L (mm)
		Name	Product reference		
GMA.30.010.ST	1+2	RAYCHEM®	RNF 3000 3/1	3.0	13
GMA.15.010.ST	2	RAYCHEM®	RNF 3000 1.5/0.5	1.5	9

Note: for cable group 2, the two heatshrink tubes are necessary

- Material: Polyolefin transparent

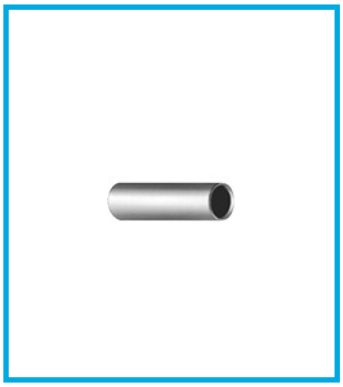

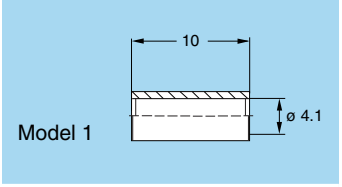

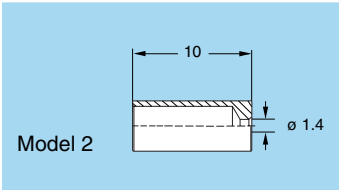

FFS Crimp ferrule

Part number	Cable group	Model
FFS.05.160.PM	1	1
FFS.05.161.PM	2	2

- Material: Aluminium alloy (AA6012) nickel plated

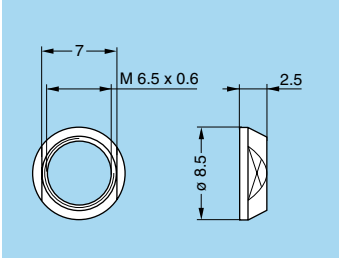

GEC Conical nut

Part number
GEC.05.241.PT

- Material: Aluminium alloy (AA 6012) natural anodized.

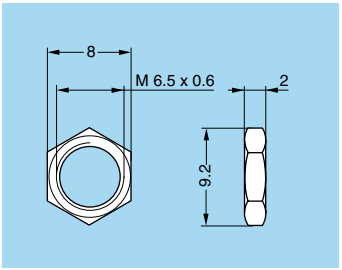

GEA Hexagonal nuts

Part number
GEA.05.241.PT

- Material: Aluminium alloy (AA 6012) natural anodized.

Tooling

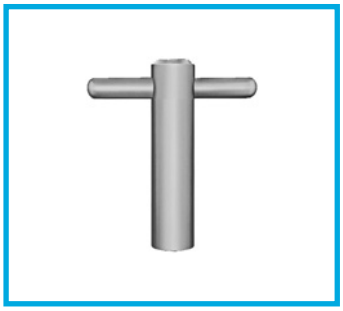

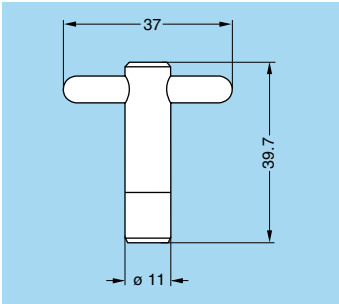

DCH Spanner for conical nut

Part Number
DCH.91.113.9TN

- Material: Blackened steel.

Automatic model

DCF Extraction tools for HV contacts

Part Number
DCF.91.133.5LT

DPH Crimping tool with die and positioner

Part Number	Applications	Cable group	Marking on die
DPH.99.005.2K	shield	1-2	DPH.91.005.2K
DPH.99.060.11K	centre contact	1	DPH.91.001.16K
DPH.99.065.11K	centre contact	2	DPK.91.001.16K

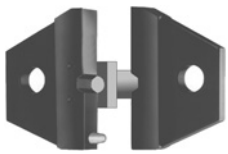

DPN Dies and positioner

Part Number	Applications	Cable group	Marking on die
DPN.99.005.2K	shield	1-2	DPH.91.005.2K
DPN.99.060.11K	centre contact	1	DPH.91.001.16K
DPN.99.065.11K	centre contact	2	DPK.91.001.16K

- Dies material: Blackened steel

Panel cut-out

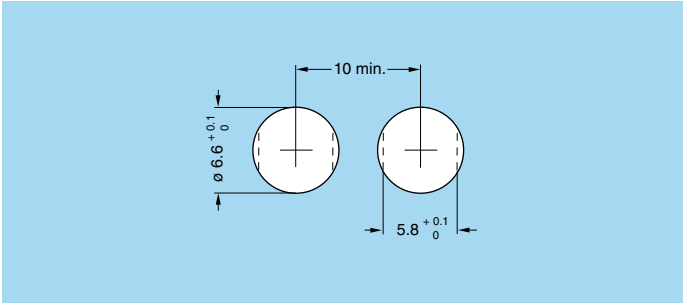

Recommended mounting nut torque: 0.8 Nm.

Termination Instructions Cable Group 1

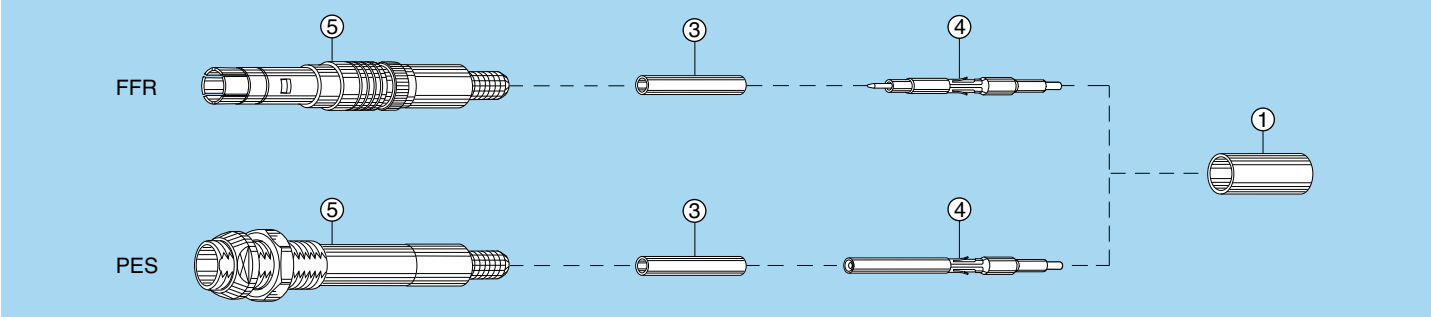

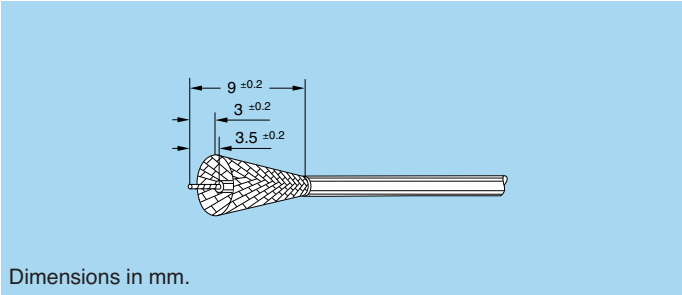

Dimensions in mm.

1. Strip the cable according to the given dimensions, remove carefully the cable corona screen, making sure that the cable dielectric is not damaged. Remove also the aluminium foil and the textile tape.
   Clean the dielectric with isopropylic alcool.

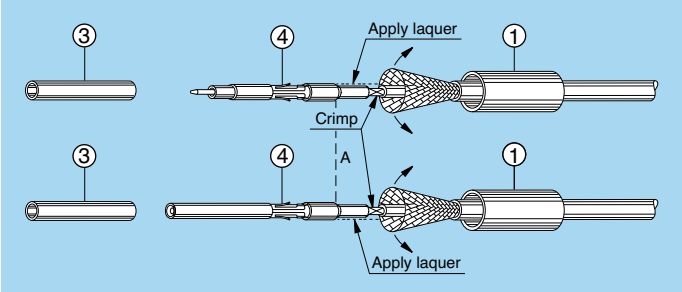

2. Place the crimp ferrule ① on the cable. Widen completely the shield braid and fold it back over the jacket.
   Introduce the cable center conductor into the HV contact ④ until the contact end rests against the dielectric and the conductor is visible through the contact inspection hole. Crimp with the LEMO crimping tool DPH.99.060.11K. Cover the crimp section of the contact and the Peek end of the HV contact with a layer of insulating laquer. Let the laquer dry, approx.15 min.
   Note: We recommand the laquer Urethan
   ref: Cellpack n° 124017

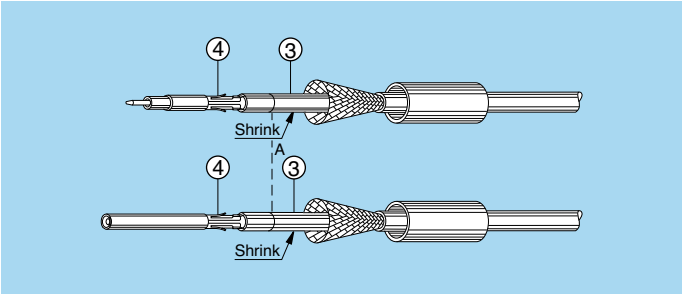

3. Slide the heatshrink tube ③ over the HV contact until it rests against the contact insulator.
   One end of the heatshrink tube shall be located at the position A of the HV contact insulator. Shrink the tube.

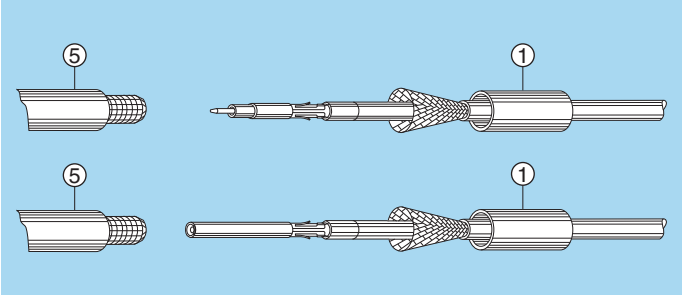

4. Fully introduce the HV contact into the connector shell ⑤. Check that the contact is correctly located and remains in position when given a gentle pull. Place the cable shield braid strand over the shell crimp back end, cut the length of braid in excess.

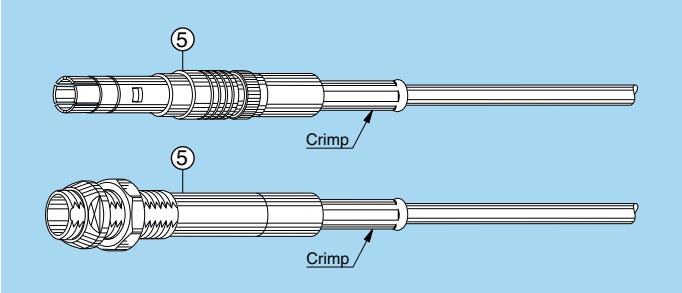

5. Slide the crimp ferrule over the cable shield until it rests against the connector shell. Crimp with the LEMO crimping tool DPH.99.005.2K.

Termination Instructions Cable Group 2

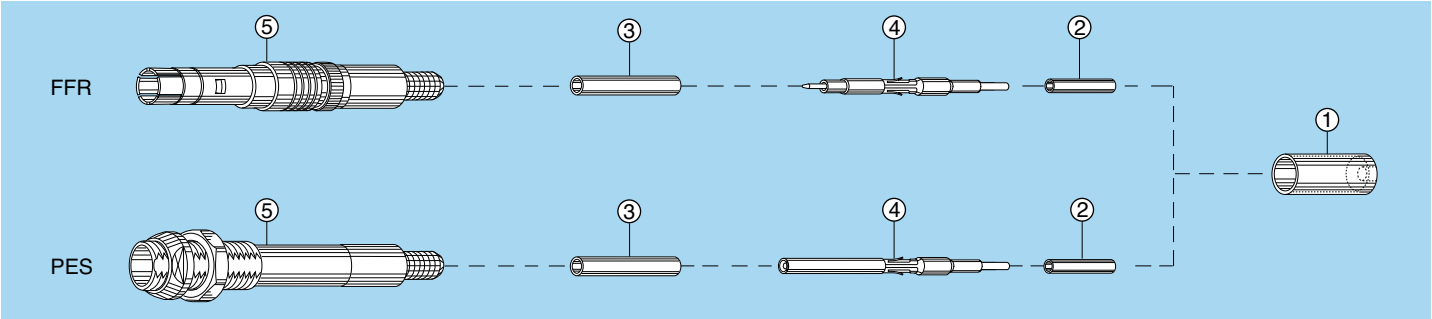

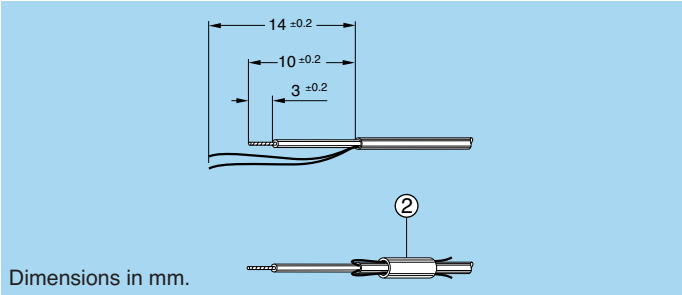

1. Strip the cable according to the given dimensions, cut the aluminium foil making sure that the dielectric is not damaged. Do not damage the 2 drain wires.
   Fold the drain wires back over the outer jacket and slide over the small heatshrink tube ②.
   Clean the dielectric with isopropylic alcool.

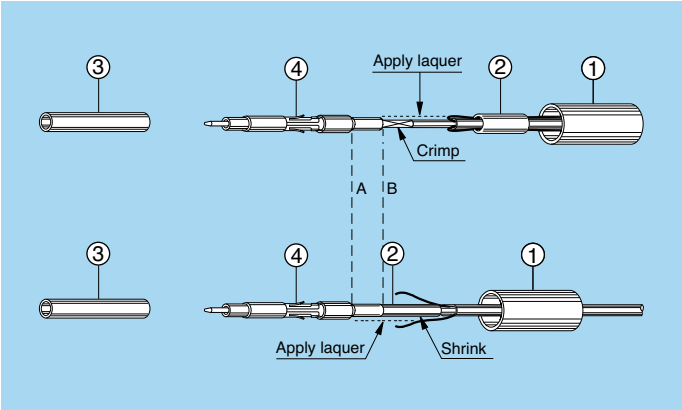

2. Place the crimp ferrule ① introducing first the small diameter on the cable. Introduce the cable center conductor and a part of the dielectric into the HV contact ④ until the conductor is fully visible through the contact inspection hole. Crimp with the LEMO crimping tool DPH.99.065.11K. Cover the crimp section of the contact and a short length of the dielectric with a layer of insulating laquer. Let the laquer dry, approx. 15 min.
   Note: We recommand the laquer Urethan
   ref: Cellpack n° 124017
   Slide the heatskrink tube ② over the HV contact until it rests against the contact insulator at the position B. Shrink the tube. Cover the Peek end of the HV contact and the first heatshrink tube with a layer of the insulating laquer. Let the laquer dry, approx. 15 min.

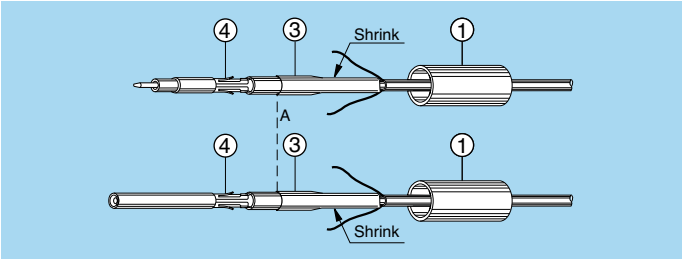

3. Slide the heatshrink tube ③ over the HV contact until it rests against the contact insulator.
   One end of the heatshrink tube shall be located at the position A of the HV contact insulator. Shrink the tube.

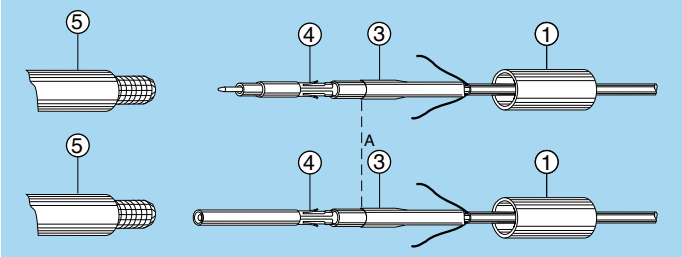

4. Fully introduce the HV contact into the connector shell ⑤. Check that the contact is correctly located and remains in position when given a gentle pull. Place the 2 drain wire around the shell crimp back end.

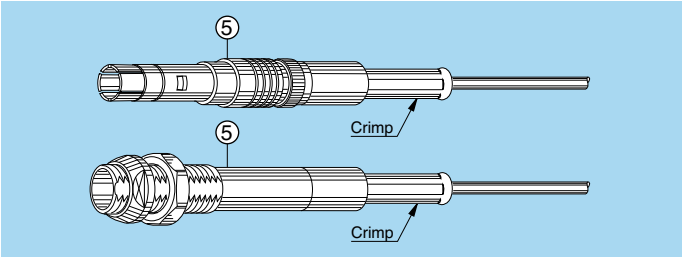

5. Slide the crimp ferrule over the cable shield until it rests against the connector shell. Crimp with the LEMO crimping tool DPH.99.005.2K.

5G Series Connectors

High voltage cylindrical connectors of the new 5G series have been specifically developed to meet the requirements of the “ATLAS” experimental nuclear research programme at the CERN.
The 5G series contains 50 miniature HV 12kV d.c. (test voltage) contacts. These crimp contacts are removable from the shell and are inserted in a PEEK insulator. The same HV contacts are used in the 05 series.
The actual mating is provided by the LEMO Push-Pull system, renowned for its reliability worldwide and a red safety nut to secure the connection.
Two keying alternative (code R or W) are available.
The compact design of these connectors makes them ideal for applications where minimal mass and space saving are critical factors.

Interconnections

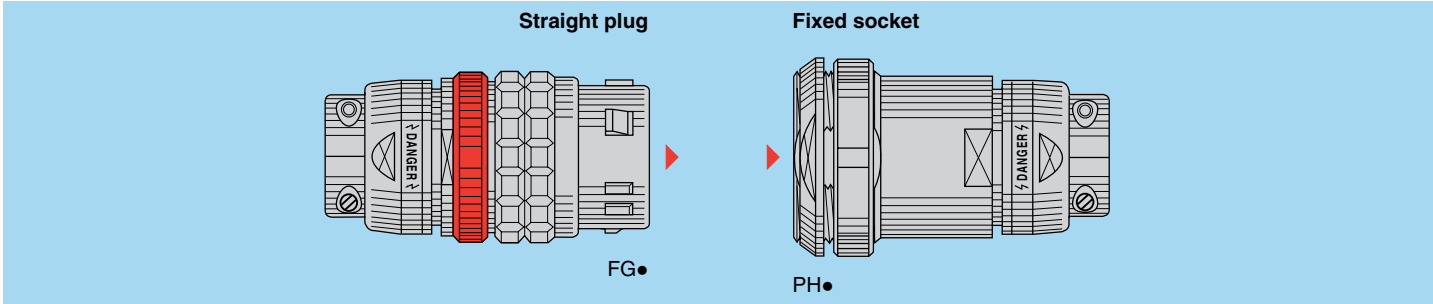

LEMO’s Push-Pull Self-Latching Connecting System

This self-latching system is renowned worldwide for its easy and quick mating and unmating features. It provides absolute security against vibration, shock or pull on the cable, and facilitates operation in a very limited space.

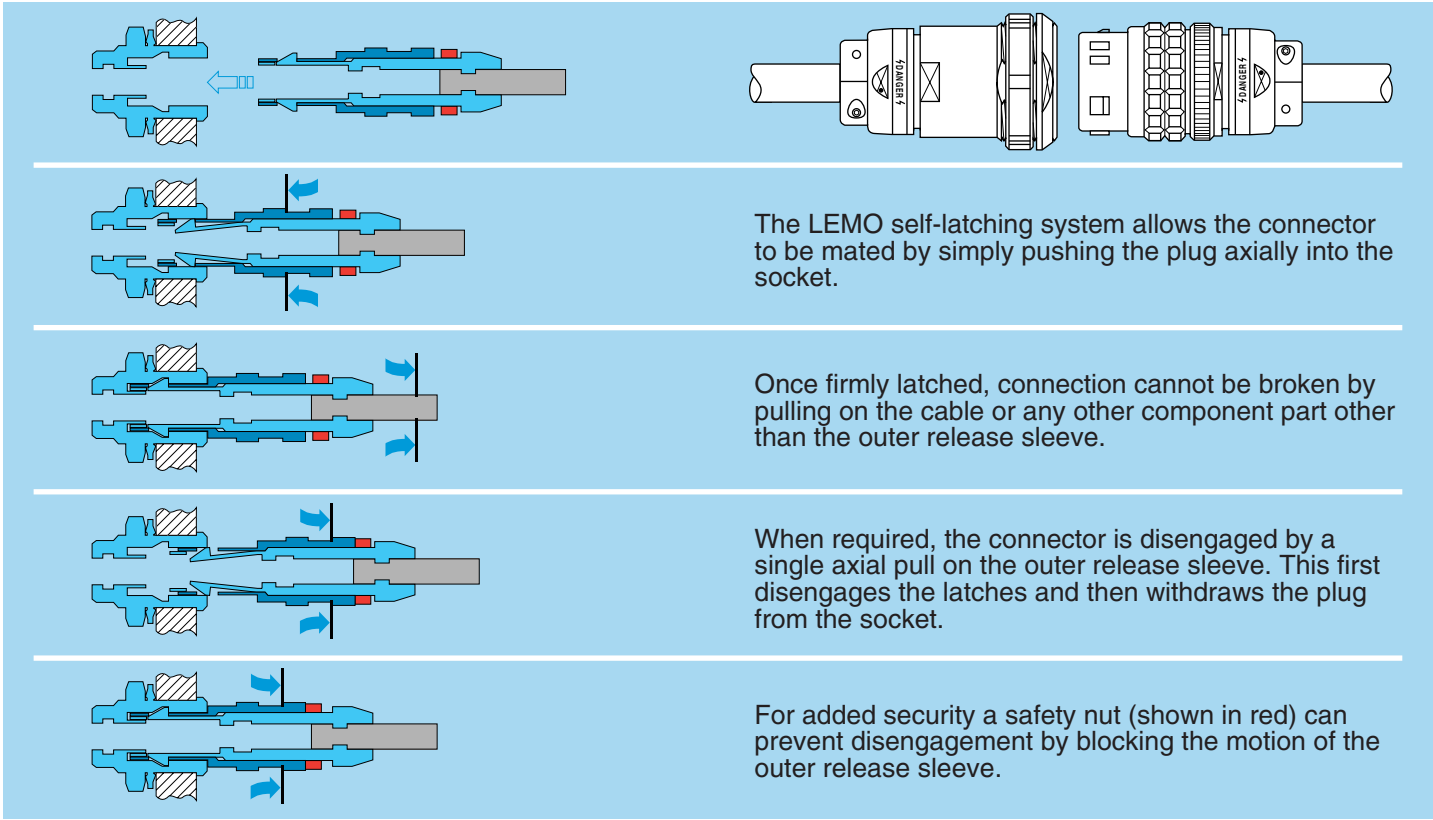

The LEMO self-latching system allows the connector to be mated by simply pushing the plug axially into the socket.

Once firmly latched, connection cannot be broken by pulling on the cable or any other component part other than the outer release sleeve.

When required, the connector is disengaged by a single axial pull on the outer release sleeve. This first disengages the latches and then withdraws the plug from the socket.

For added security a safety nut (shown in red) can prevent disengagement by blocking the motion of the outer release sleeve.

Part Section Showing Internal Components

Connector

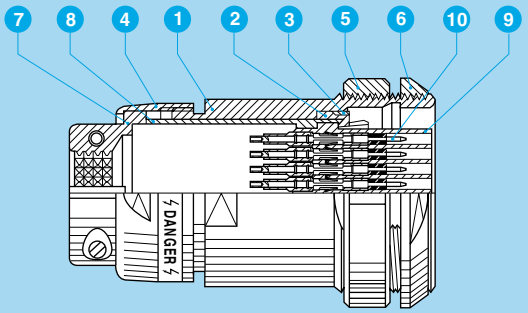

Fixed socket

1. outer shell
2. earthing crown
3. retaining ring
4. clamp collet nut
5. round nut
6. conical nut
7. adapter w. cable collet
8. keyed mid-piece
9. insulator
10. HV male contact

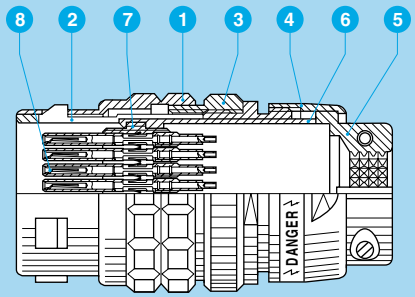

Straight plug

1. outer shell
2. latch sleeve
3. safety nut
4. clamp collet nut
5. adapter w. cable collet
6. keyed mid-piece
7. insulator
8. HV female contact

HV Contact

Male contact

1. male contact
2. insulator
3. clips
4. sealing gland

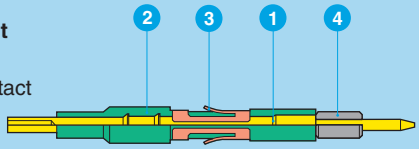

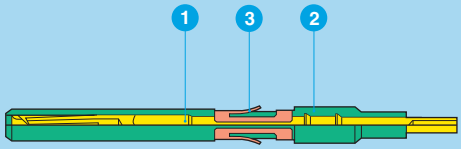

Female contact

1. female contact
2. insulator
3. clips

Technical characteristics

Mechanical and climatical

Characteristic	Value	Standard
Contact retention force	40 N	IEC 60512-8 test 15a
Working temperature	-20 °C to +125°C	
Mechanical life	> 100 cycles	IEC 60512-5 test 9a
Climatic class	20/125/21	IEC 60068-1
Radiation resistance	$>10^6$ Gy	

Electrical characteristics

Characteristic	Value	Standard
Test voltage d.c.[1)]	12 kV (1 min.)	IEC 60512-2 test 4a
Rated current	4 A	IEC 60512-3 test 5a
Contact resistance	≤ 8 mΩ	IEC 60512-2 test 2a
Screen resistance	≤150 mΩ	IEC 60512-2 test 2f
Insulation resistance	≥ 10^{12} Ω	IEC 60512-2 test 3a

Note: [1)] specific assembly instructions shall be respected.

Materials and Treatment – Connector

Component	Material (standard)	Surface treatment (µm)
		Ni
Outershell + collet nut	Aluminium (AA 6012)	Anodized natural
Safety nut	Aluminium (AA 6012)	Anodized red
Earthing crown	Aluminium special	5
Latch sleeve	Aluminium special	5
Round and conical nut	Aluminium (AA 6012)	Anodized natural
Insulator	PEEK	–
Other metallic pieces	Aluminium	Anodized natural

Contact

Component	Material (standard)	Surface treatment (µm)		
		Cu	Ni	Au
Male contact	Brass (UNS C38500)	0.5	3	1.0
Female contact	Bronze (UNS C54400)	0.5	3	1.5
Contact clips	Cu-Be (QQ-C-530)	–		
Insulator	PEEK	–		
Sealing gland	Silicone PVMQ	–		

Alignment key and polarized keying system

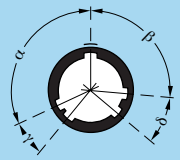

Front view of a socket

Ref.	Dot Colour	Angle				HV contact type	
		α	β	γ	δ	Plug	Socket
●●R	yellow	110°	105°	25°	35°	male	female
●●W	red	95°	115°	20°	30°	female	male

Models

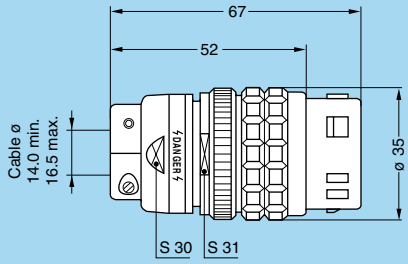

FG● Straight plug with keys (code R or W), cable clamp-collet and safety nut

Part Number	Cable Group
FGR.5G.450.LLAY5T1	1
FGR.5G.450.LLAY5T2	2
FGW.5G.450.LLLY5T1	1
FGW.5G.450.LLLY5T2	2

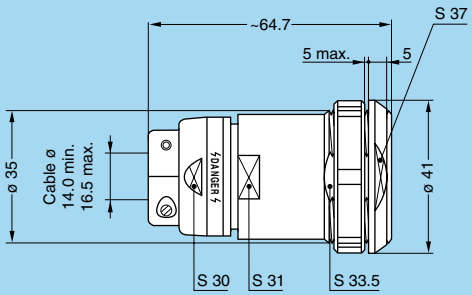

PH● Fixed socket with keys (code R or W), cable clamp-collet, 2 nuts fixing (back panel mounting)

Part Number	Cable Group
PHR.5G.450.LLLY5T1	1
PHR.5G.450.LLLY5T2	2
PHW.5G.450.LLAY5T1	1
PHW.5G.450.LLAY5T2	2

Recommanded high voltage cables

Cable group	Manufacturer Part Number	CERN Type	Type/Nb. of conductor	Construction and dimensions								
				Conductor			Dielectric		Screen	Sheath		Corona screen
				Constr.	Mat.	ø	Mat.	ø	Mat.	Mat.	ø	
1	SILISOL CEPMB - 56x0.12 mm^2		Multi/56	7x0.15	CuSn	0.45	PE	1.5	CuSn + Alu	Silic	14.5	no
1	ABBNK - 45/94	HTC 50-1-1	Mono/1	7x0.17	CuSn	0.51	PE solid	1.5	CuSn 16x4x0.1	Polyo-lefine	3.3	yes
2	HABIA 31789-004-001	HFI 150 mini coax	Mono/1	Mono	Cu	0.16	HFI 150	0.5	Drain 2x0.1 + Alu polyester	HFI 150	1.15	no

Accessories

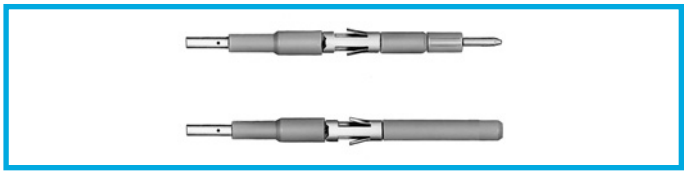

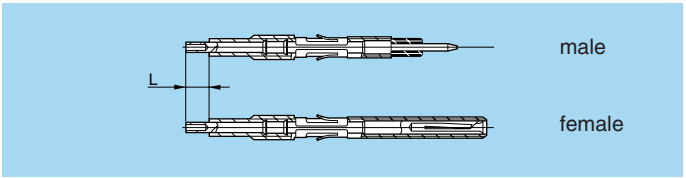

FFA-ERA HV Contacts

Contact Part Number		Cable group	L (mm)
Male contact	Female contact		
FFA.05.403.ZLA1	ERA.05.403.ZLL1	1	4
FFA.05.403.ZLA2	ERA.05.403.ZLL2	2	6

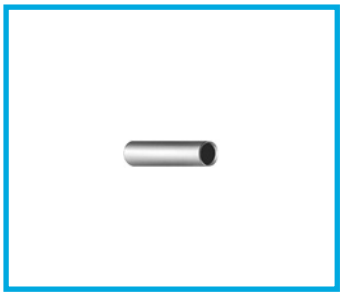

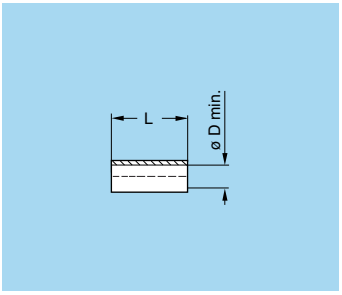

GMA Heatshrink tube

Shall be ordered separately

Part number	Cable group	Supplier		øD (mm)	L (mm)
		Name	Product reference		
GMA.30.010.ST	1+2	RAYCHEM®	RNF 3000 3/1	3.0	13
GMA.15.010.ST	2	RAYCHEM®	RNF 3000 1.5/0.5	1.5	9

Note: for cable group 2, the two heatshrink tubes are necessary

- Material: Polyolefin transparent

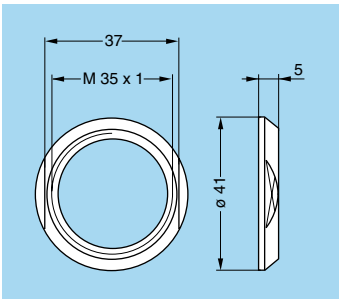

GEC Conical nut

Part number
GEC.5G.240.PT

- Material: Aluminium alloy (AA6012) natural anodized

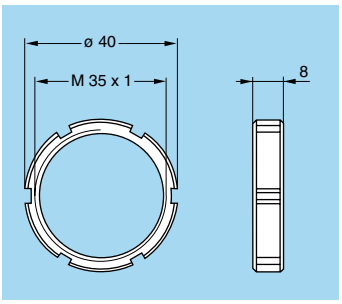

GEB Round nut

Part number
GEB.5G.240.PT

- Material: Aluminium alloy (AA6012) natural anodized

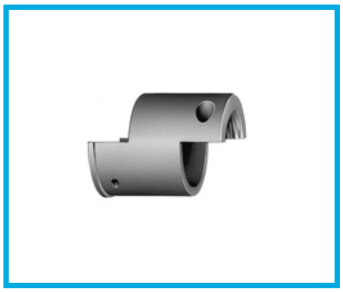

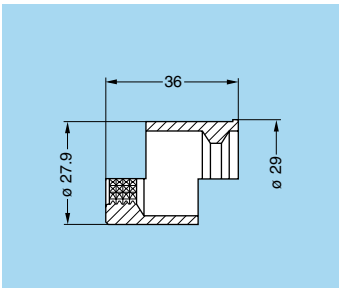

FGG Extension piece

Part Number
FGG.5G.815.PN

Note: allows an extension of the plug or the socket to make cable stripping and mounting easier when weight and size are not critical

- Material: Aluminium alloy (AA6012) natural anodized

Tooling

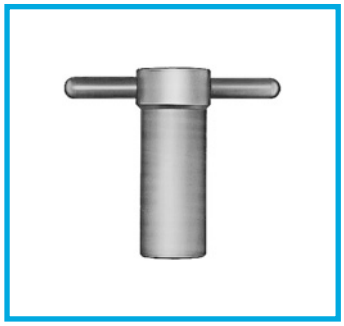

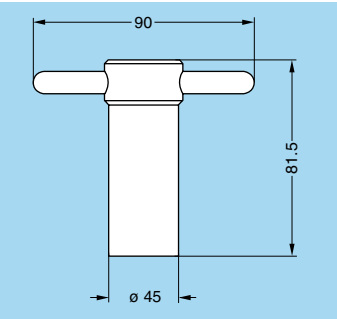

DCH Spanner for conical nut

Part Number
DCH.91.418.0TN

- Material: Blackened steel.

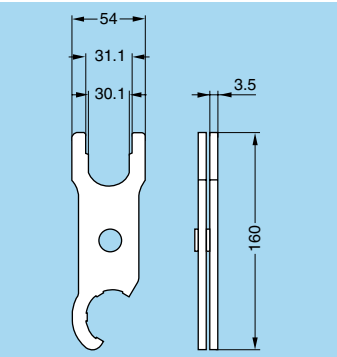

DCP Set of flat spanners for collet nuts and round nuts

Part Number
DCP.91.005.TN

- Material: Blackened steel.

Automatic model

DCF Extraction tools for HV contacts

Part Number
DCF.91.133.5LT

DPH Crimping tool with die and positioner

Part Number	Applications	Cable group	Marking on die
DPH.99.005.2K	shield	1-2	DPH.91.005.2K
DPH.99.060.11K	centre contact	1	DPH.91.001.16K
DPH.99.065.11K	centre contact	2	DPK.91.001.16K

Note: DPN Dies and positioner: See 05 series data sheet.

Panel cut-out

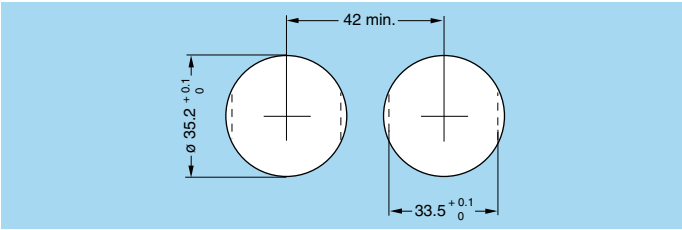

Recommended mounting nut torque: 7 Nm.

Termination Instructions Cable Group 1 (multi HT cable)

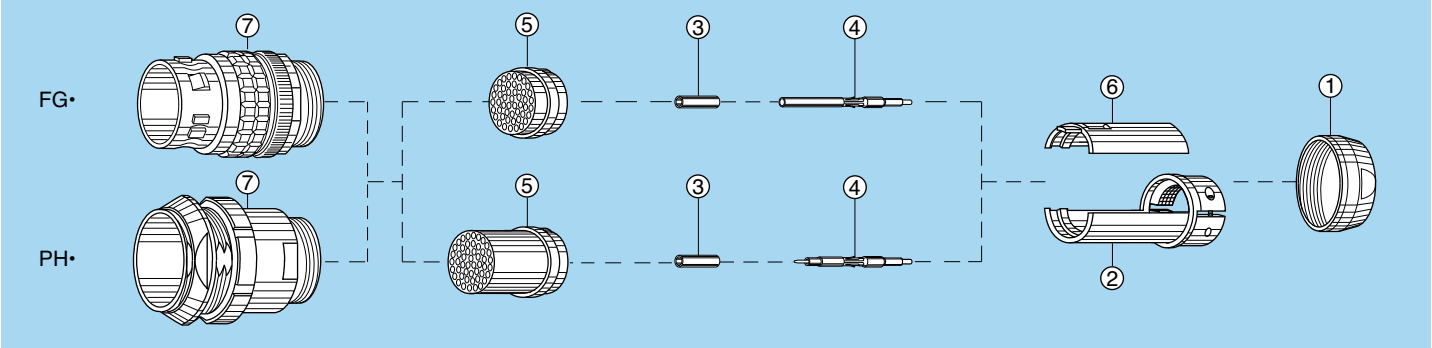

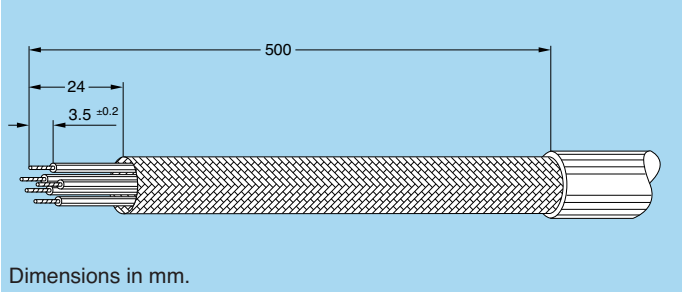

Dimensions in mm.

1. Strip the cable according to the given dimensions.
   A 500 mm length is necessary to give enough flexibility to the cable.
   Remove first the outer jacket and the screen then the dielectric of each individual high-voltage conductor, making sure that the cable dielectric is not damaged.

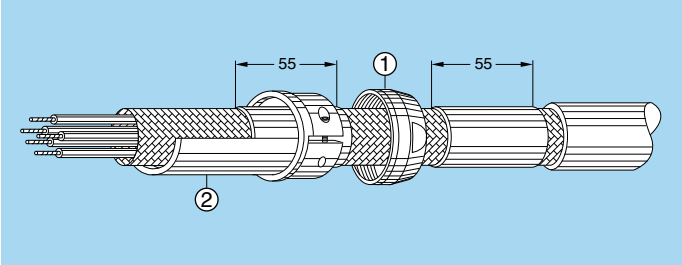

2. Slide 2 pieces of 55mm heat-shrink tubing, (not supplied) of the correct size, the clamp collet nut ① and the adapter with cable collet ② on the cable.

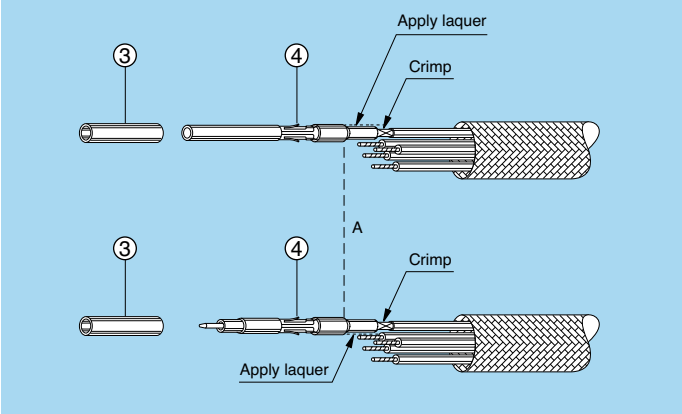

3. For each individual high-voltage conductor install a HV contact as follow:

3.1 Introduce the cable center conductor into the HV contact ④ until the conductor end rests against the dielectric and the conductor is visible through the contact inspection hole. Crimp with the LEMO crimping tool DPH.99.060.11K. Cover the crimp section of the contact and the Peek end of the HV contact with a layer of insulating laquer. Let the laquer dry, approx. 15 min.
Note: We recommand the laquer Urethan
ref: Cellpack n° 124017

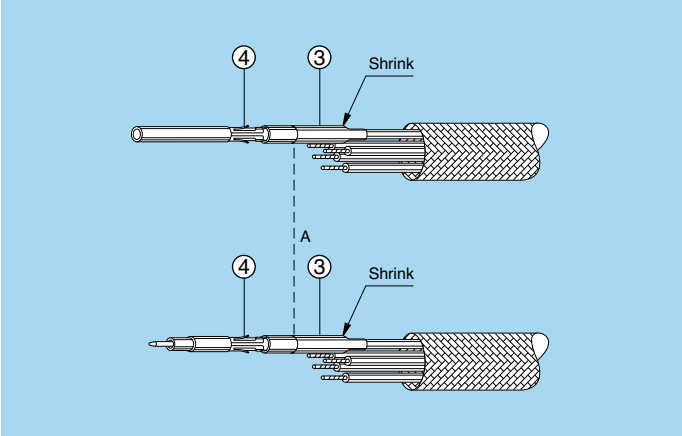

3.2 Slide the heatshrink tube ③ over the HV contact until it rests against the contact insulator.
One end of the heatshrink tube shall be located at the position A of the HV contact insulator. Shrink the tube.

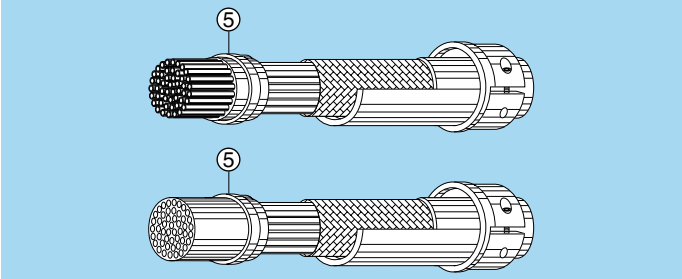

4. Fully introduce the HV contacts into the insulator ⑤.
   – The short insulator shall be fitted with the female HV contacts.
   – The long insulator shall be fitted with the male HV contacts.
   Check that the contacts are correctly located and remains in position when given a gentle pull.

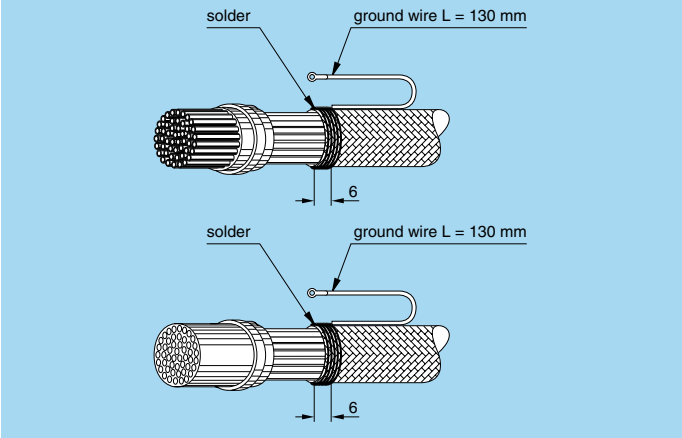

5. Install a ground wire (not supplied) as follow:

5.1 Wrap a tin copper wire 0.5 mm² over a 6 mm length of the cable screen and hold the ground wire as shown. Then solder.
Solder an earthing washer with a 3.5 mm hole on the other side.

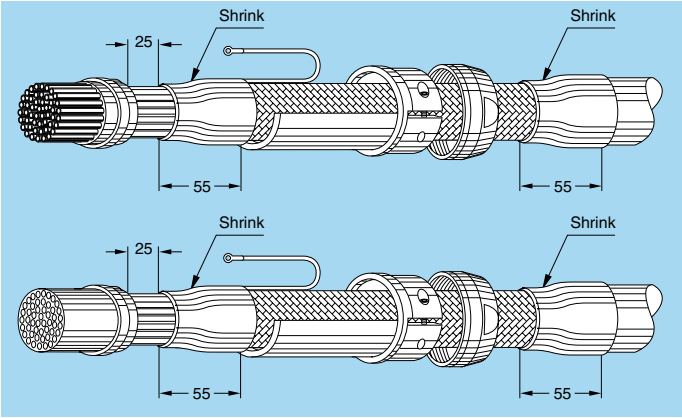

5.2 Cover the end of the cable screen with the first heat-shrink tube and the end of the cable jacket with the second heat-shrink tube, then shrink.

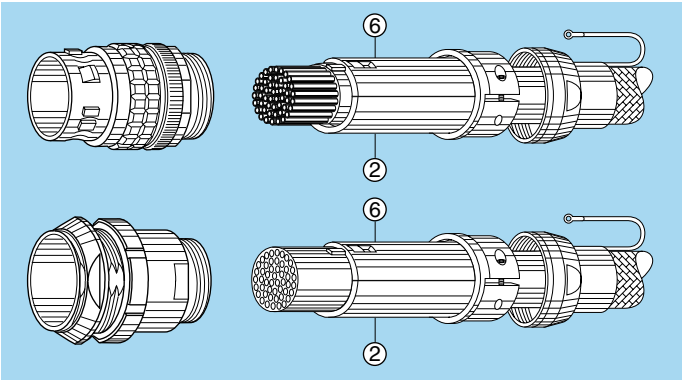

6. Push the adapter with cable collet ② forward over the cable until the insulator locate into the groove on the adapter.
   Then fit the keyed mid-piece ⑥ onto the insulator, make sure that the key of the insulator is correctly located into the key of the mid-piece.

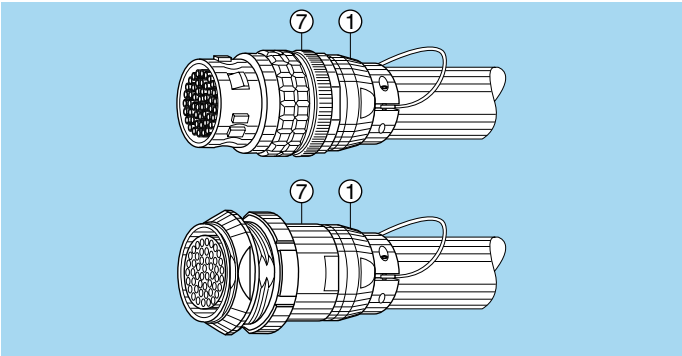

7. Next slide the connector shell ⑦ over the insulator assembly making sure that the key on the keyed mid piece goes into the key-way (under the color point/inside the shell).
   – Note that the HV contact type shall be respected depending upon the keying code as indicated on page 10.
   Screw the collet nut ① and tighten to the maximum torque value of 4 Nm.
   Tight the two screws of the adapter and in between on an appropriate manner the washer of the ground wire.

K and S Series Connectors

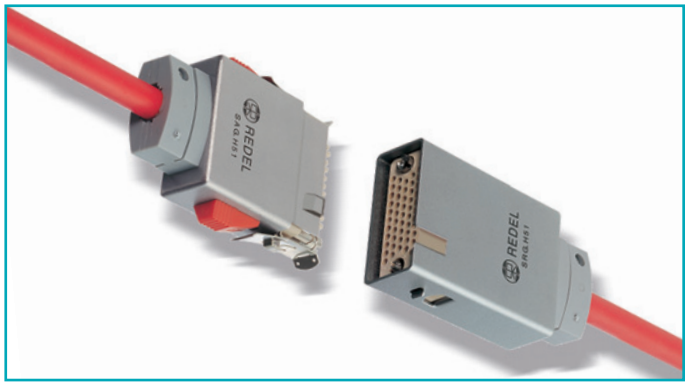

High voltage rectangular connectors of the new K and S series have been specially developed to meet the requirements of the “ATLAS” experimental nuclear research programme at the CERN.
The K series contains 22 miniature HV contacts (12kV d.c. test voltage).
The S series contains 51 miniature HV contacts (12kV d.c. test voltage). These crimp contacts are removable from the shell and are inserted in a PEEK insulator. The mating is assured by guide pins and sleeves. Two red sliding tabs secure the connection by locking a pair of levers to a bracket mounted on the housing. The rectangular design of these connectors makes them ideal for applications where space saving is critical; for example on narrow panels.

INTERCONNECTION

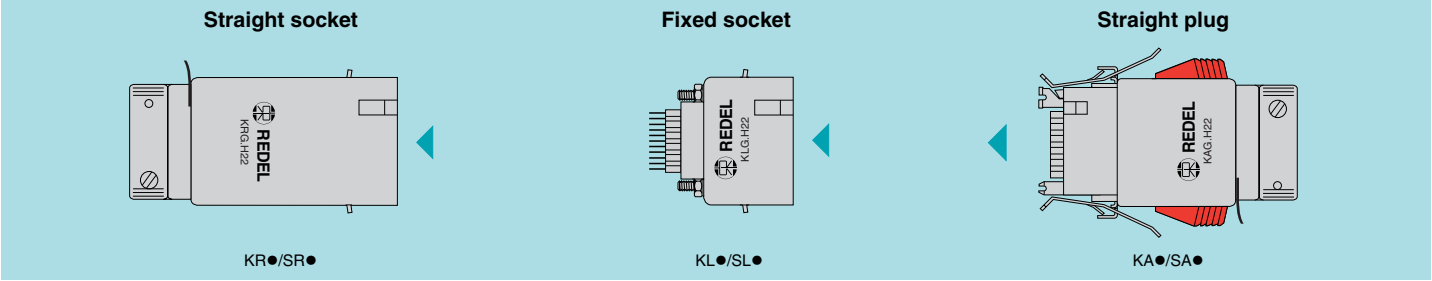

SELF-LATCHING CONNECTING SYSTEM

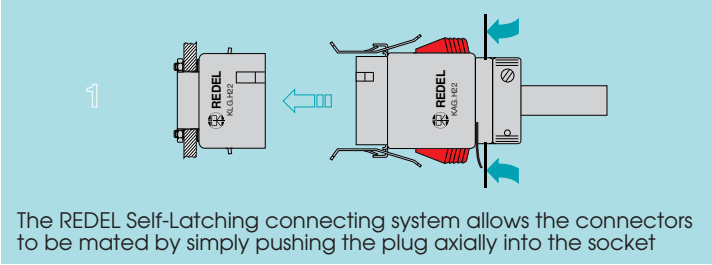

The REDEL Self-Latching connecting system allows the connectors to be mated by simply pushing the plug axially into the socket

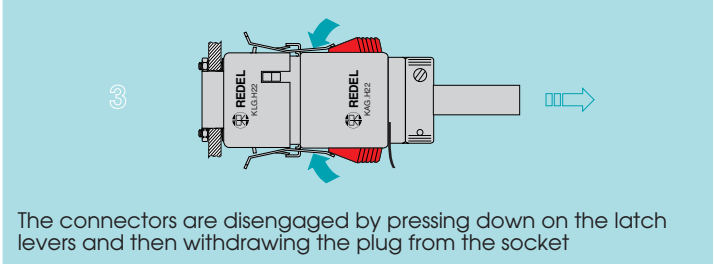

The connectors are disengaged by pressing down on the latch levers and then withdrawing the plug from the socket

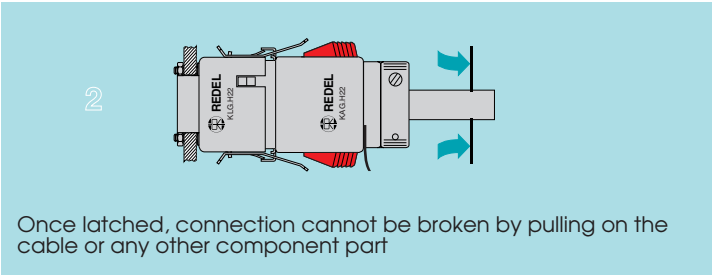

Once latched, connection cannot be broken by pulling on the cable or any other component part

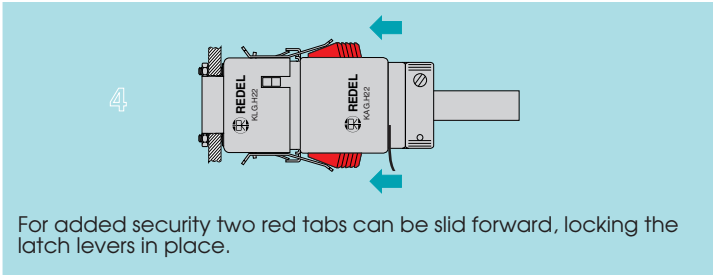

For added security two red tabs can be slid forward, locking the latch levers in place.

ALIGNMENT KEY

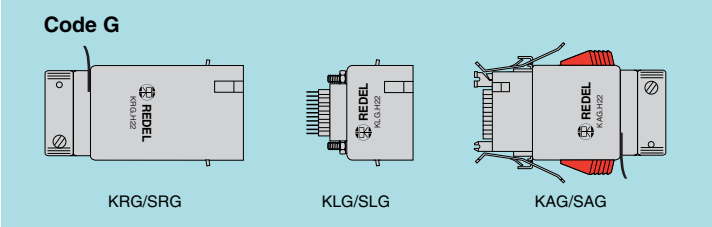

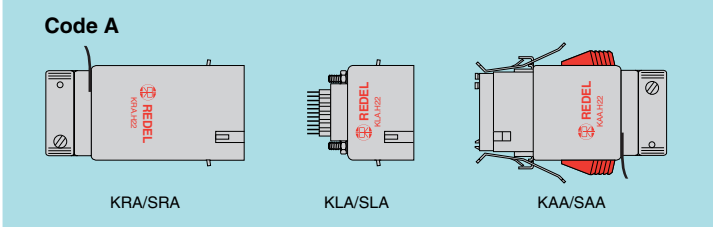

PART SECTION SHOWING INTERNAL COMPONENTS

Connector

Rectangular socket

1. outer shell
2. insulator
3. HV male contact
4. male guide pin
5. threaded insert
6. cable clamp
7. earthing insert
8. earthing tag

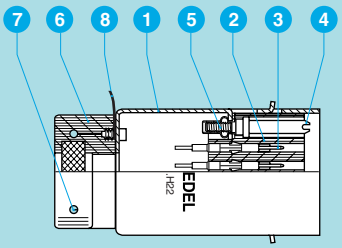

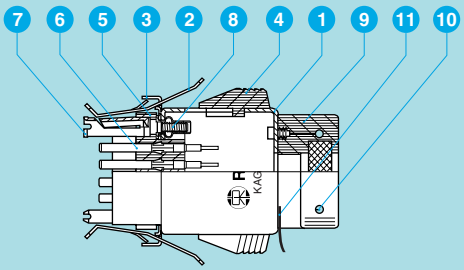

Rectangular plug

1. outer shell
2. latch lever
3. locking clip
4. security tab
5. insulator
6. HV female contact
7. female guide pin
8. threaded insert
9. cable clamp
10. earthing insert
11. earthing tag

HV Contact

Male contact

1. male contact
2. insulator
3. clips
4. sealing gland

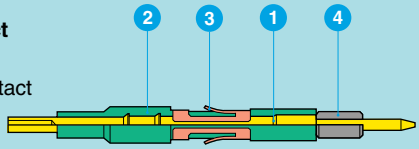

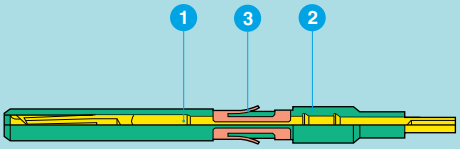

Female contact

1. female contact
2. insulator
3. clips

TECHNICAL CHARACTERISTICS

Mechanical and climatical

Characteristic	Value	Standard
Contact retention force	40 N	IEC 60512-8 test 15a
Working temperature	-20 °C to +125°C	
Mechanical life	> 100 cycles	IEC 60512-5 test 9a
Climatic class	20/125/21	IEC 60068-1
Radiation resistance	> 10^6 Gy	

Electrical characteristics

Characteristic	Value	Standard
Test voltage d.c.[1)]	9/12 kV (1 min.)	IEC 60512-2 test 4a
Rated current	4 A	IEC 60512-3 test 5a
Contact resistance	≤ 8 mΩ	IEC 60512-2 test 2a
Screen resistance	≤150 mΩ	IEC 60512-2 test 2f
Insulation resistance	≥ 10^{12} Ω	IEC 60512-2 test 3a

Note: [1)] specific assembly instructions shall be respected.
9 kV dc apply to the pair KA●/KL● and SA●/SL●.
12 kV dc apply to the pair KA●/KR● and SA●/SR●.

Materials and Treatment – Connector

Component	Material (standard)	Surface treatment (µm)
		Ni
Outershell	Aluminium	5
Latching mechanism	Bronze	5
Insulator	PEEK	–
cable clamp	PSU	–
Other met. pieces	Stainless Steel	–
Other plastic pieces	PSU	–

Contact

Component	Material (standard)	Surface treatment (µm)		
		Cu	Ni	Au
Male contact	Brass (UNS C38500)	0.5	3	1.0
Female contact	Bronze (UNS C54400)	0.5	3	1.5
Contact clips	Cu-Be (QQ-C-530)	–		
Insulator	PEEK	–		
Sealing gland	Silicone PVMQ	–		

MODELS K series (22 contacts)

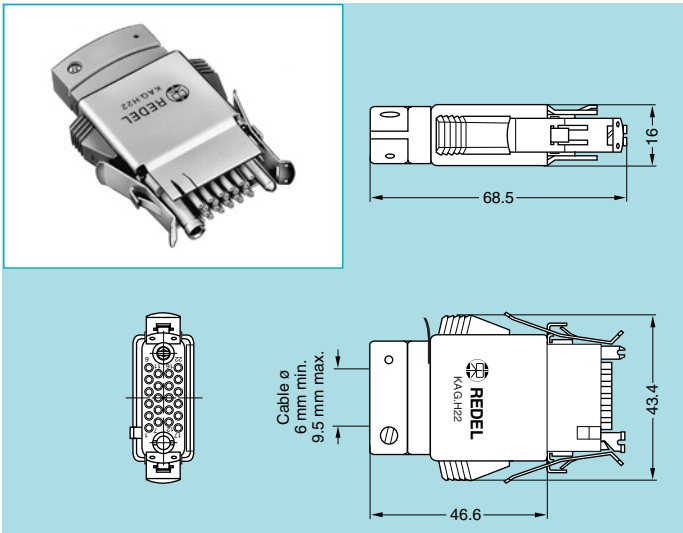

KA● Straight plug with key (code G or A) and cable collet

Part Number	Cable Group	Contact Type	Marking
KAG.H22.LLZBG	no contact	female	black
KAA.H22.LLZBG		male	red
KAG.H22.LLLB1G	1	female	black
KAA.H22.LLAB1G		male	red
KAG.H22.LLLB2G	2	female	black
KAA.H22.LLAB2G		male	red

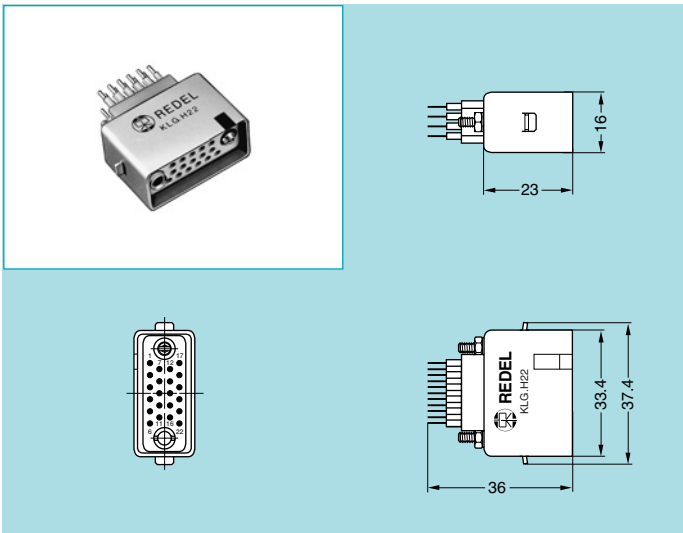

KL● Fixed socket with key (code G or A), two screw fixing

Part Number	Cable Group	Contact Type	Marking
KLG.H22.LLZG	no contact	male	black
KLA.H22.LLZG		female	red
KLG.H22.LLA1G	1	male	black
KLA.H22.LLL1G		female	red
KLG.H22.LLA2G	2	male	black
KLA.H22.LLL2G		female	red

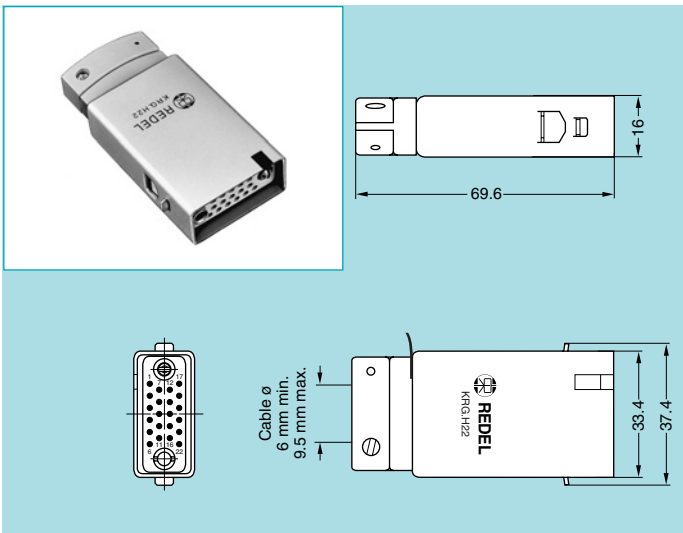

KR● Straight socket with key (code G or A) and cable collet

Part Number	Cable Group	Contact Type	Marking
KRG.H22.LLZBG	no contact	male	black
KRA.H22.LLZBG		female	red
KRG.H22.LLAB1G	1	male	black
KRA.H22.LLLB1G		female	red
KRG.H22.LLAB2G	2	male	black
KRA.H22.LLLB2G		female	red

MODELS S series (51 contacts)

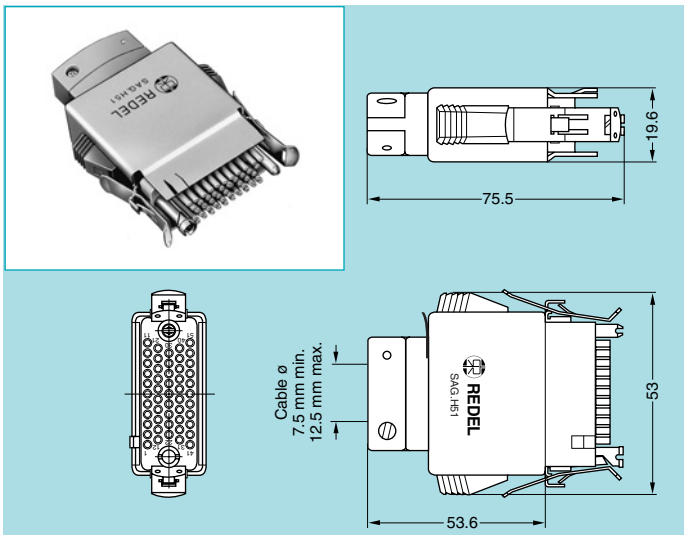

SA● Straight plug with key (code G or A) and cable collet

Part Number	Cable Group	Contact Type	Marking
SAG.H51.LLZBG	no contact	female	black
SAA.H51.LLZBG		male	red
SAG.H51.LLLB1G	1	female	black
SAA.H51.LLAB1G		male	red
SAG.H51.LLLB2G	2	female	black
SAA.H51.LLAB2G		male	red

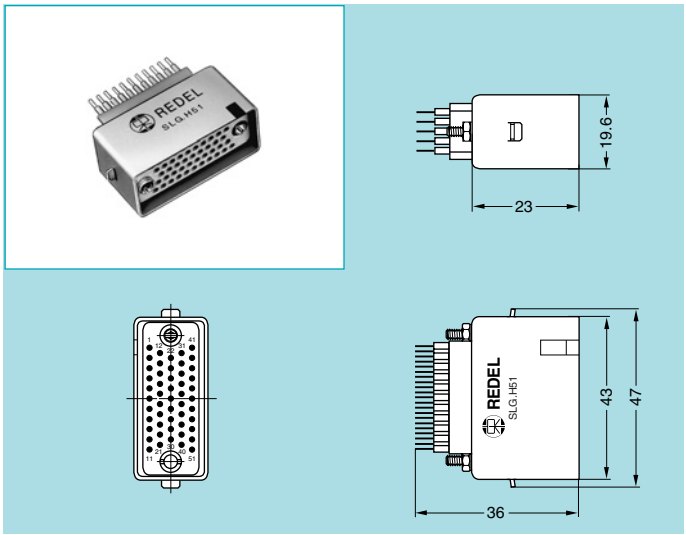

SL● Fixed socket with key (code G or A), two screw fixing

Part Number	Cable Group	Contact Type	Marking
SLG.H51.LLZG	no contact	male	black
SLA.H51.LLZG		female	red
SLG.H51.LLA1G	1	male	black
SLA.H51.LLL1G		female	red
SLG.H51.LLA2G	2	male	black
SLA.H51.LLL2G		female	red

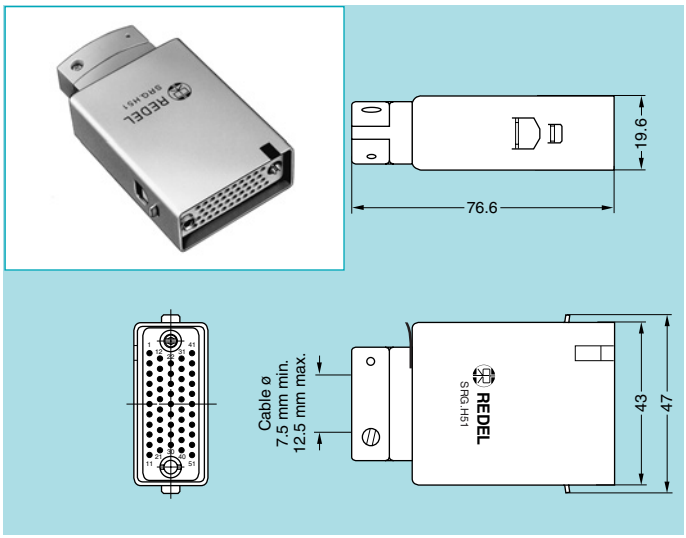

SR● Straight socket with key (code G or A) and cable collet

Part Number	Cable Group	Contact Type	Marking
SRG.H51.LLZBG	no contact	male	black
SRA.H51.LLZBG		female	red
SRG.H51.LLAB1G	1	male	black
SRA.H51.LLLB1G		female	red
SRG.H51.LLAB2G	2	male	black
SRA.H51.LLLB2G		female	red

ACCESSORIES

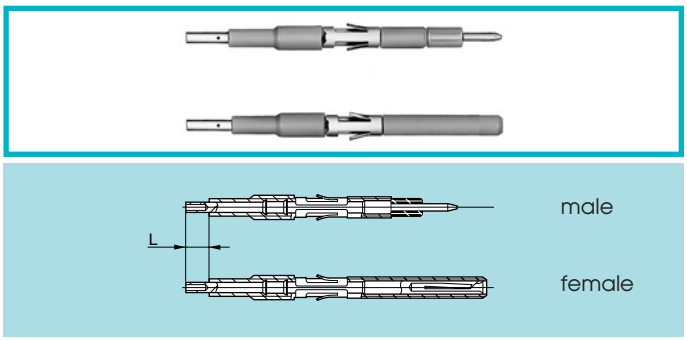

FFA-ERA High Voltage Contacts

Contact Part Number		Cable group	L (mm)
Male contact	Female contact		
FFA.05.403.ZLA1	ERA.05.403.ZLL1	1	4
FFA.05.403.ZLA2	ERA.05.403.ZLL2	2	6

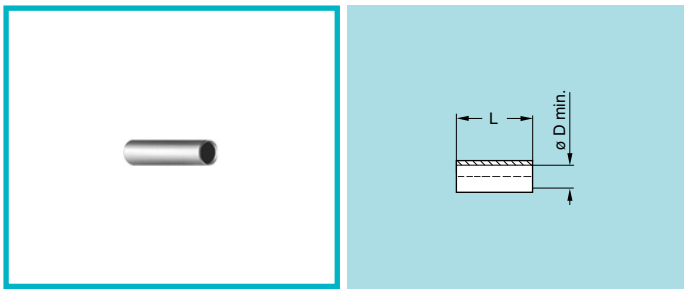

GMA Heatshrink tube

Shall be ordered separately

Part number	Cable group	Supplier		øD	L
		Name	Product reference		
GMA.30.010.ST	1	RAYCHEM®	RNF 3000 3/1	3.0	13
GMA.15.010.ST	2	RAYCHEM®	RNF 3000 1.5/0.5	1.5	9

Note: for cable group 2, the two heatshrink tubes are necessary

- Material: Polyolefine transparent

TOOLING

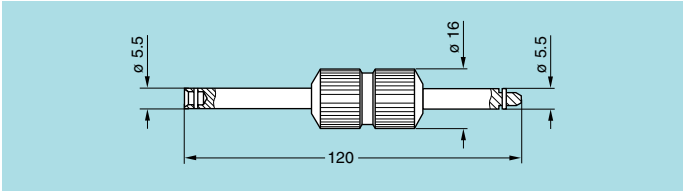

DCT Assembly tool for guide pins

Part Number
DCT.91.551.0LA

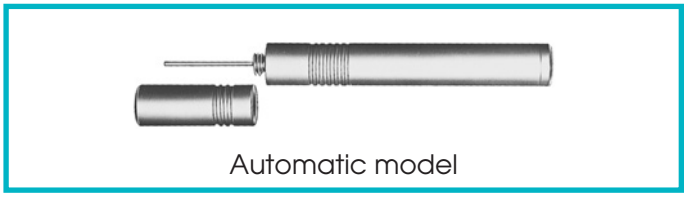
Automatic model

DCF Extraction tools for HV contacts

Part Number
DCF.91.133.5LT

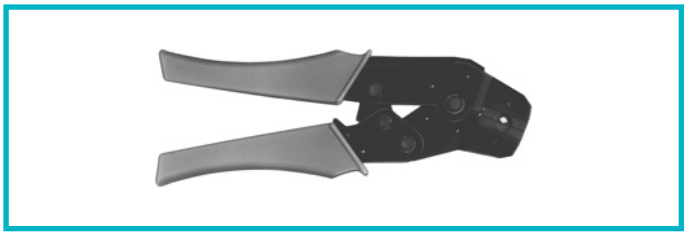

DPH Crimping tool with die and positioner

Part Number	Applications	Cable group	Marking on die
DPH.99.005.2K	shield	1-2	DPH.91.005.2K
DPH.99.060.11K	centre contact	1	DPH.91.001.16K
DPH.99.065.11K	centre contact	2	DPK.91.001.16K

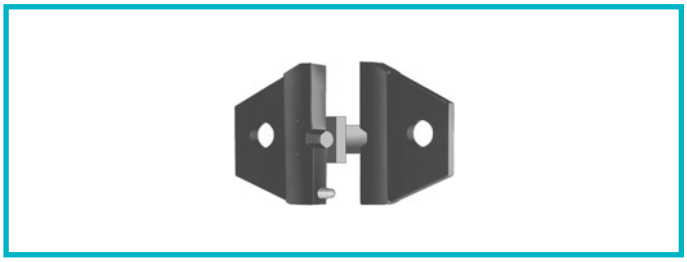

DPN Dies and positionner

Part Number	Applications	Cable group	Marking on die
DPN.99.005.2K	shield	1-2	DPH.91.005.2K
DPN.99.060.11K	centre contact	1	DPH.91.001.16K
DPN.99.065.11K	centre contact	2	DPK.91.001.16K

- Dies material: Blackened steel

PANEL CUT-OUT

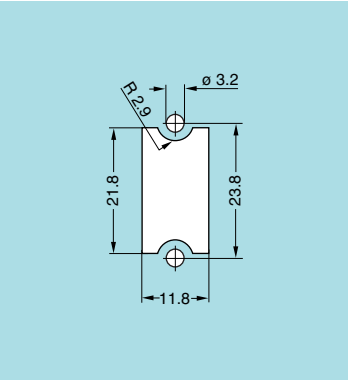

K series

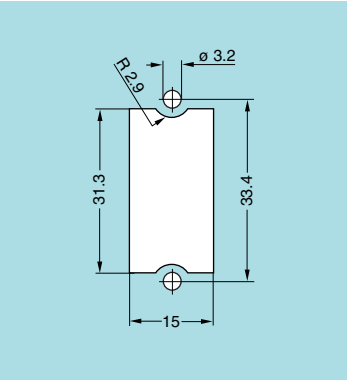

S series

RECOMMANDED CABLES

Cable group	Manufacturer Part Number	CERN Type	Type/Nb. of conductor	Construction and dimensions								
				Conductor			Dielectric		Screen	Sheath		Corona screen
				Constr.	Mat.	ø	Mat.	ø	Mat.	Mat.	ø	
1	SILISOL CEPMB - 56x0.12 mm^2		Multi/56	7x0.15	CuSn	0.45	PE	1.5	CuSn + Alu	Silic	14.5	no
1	ABBNK - 45/94	HTC 50-1-1	Mono/1	7x0.17	CuSn	0.51	PE solid	1.5	CuSn 16x4x0.1	Polyo-lefine	3.3	yes
2	HABIA 31789-004-001	HFI 150 mini coax	Mono/1	Mono	Cu	0.16	HFI 150	0.5	Drain 2x0.1 + Alu polyester	HFI 150	1.15	no

EARTHING CONTACT

Usually, some H.V. contacts are used to connect earthing from the cable shield to the instrument panel. For such earthing connection it is also possible to use L.V. crimp contacts. With a crimp barrel of 1,4 mm, these contacts can be used with wires AWG 18-20.

Connector models	Contact type	Contact part number	Crimp hole Ø	AWG range	Positioner part number	Selector position	Crimp tool part number
KAG-KLA-KRA-SAG-SLA-SRA	male	KAG.565.ZZC	1.4 mm	18-20	DCE.91.132.BVC	8 - 7	DPC.91.701.V[1]
KAA-KLG-KRG-SAA-SLG-SRG	female	EGG.3B.665.ZZM	1.4 mm	18-20	DCE.91.133.BVM	8 - 7	
KAG-KLA-KRA-SAG-SLA-SRA	male	KAG.567.ZZC	0.8 mm	22-24-26	DCE.91.132.BVC	6 - 5 - 5	
KAA-KLG-KRG-SAA-SLG-SRG	female	EGG.3B.667.ZZM	0.8 mm	22-24-26	DCE.91.133.BVM	6 - 5 - 5	

Note: [1] according to specification MIL-C-22520/7-01

Termination instructions

Refer to 05 series (page 6 & 7) for each individual H.V. contacts

Headquarters, Ecublens Switzerland

AUSTRALIA
JOHN BARRY GROUP Pty. Ltd
Unit 1, 706 Mowbray Road
Lane Cove, NSW 2066
Tel: (+61 2) 93 55 23 80
Fax: (+61 2) 93 55 23 81
lemo@johnbarry.com.au

AUSTRIA
LEMO Elektronik GesmbH
Lemböckgasse 49/E6-3
1230 Wien
Tel: (+43 1) 914 23 20 0
Fax: (+43 1) 914 23 20 11
sales@lemo.at

BRAZIL
LEMO Latin America Ltda
Av. José Rocha Bonfim,
214 Salas 224 / 225
Condomínio Praça Capital
Ed. Chicago
Campinas / SP - Brasil 13080-650
Tel: +55 (11) 98689 4736
rrodrigues@lemo.com

BRAZIL
RAIMECK Industria e Comércio Ltda
Rua Dr. S. Lappetina Russo, 11
04753-110 São Paulo - SP Brasil
Tel: (+55 11) 55 24 58 21
Fax: (+55 11) 55 24 58 21
raimeck@raimeck.com.br

CANADA
LEMO Canada Inc
44 East Beaver Creek Road, unit 20
Richmond Hill, Ontario L4B 1G8
Tel: (+1 905) 889 56 78
Fax: (+1 905) 889 49 70
info-canada@lemo.com

CHINA / HONG KONG
LEMO Electronics (Shanghai) Co., Ltd
First Floor, Block E,
18 Jindian Road, Pudong
Shanghai, China, 201206
Tel: (+86 21) 5899 7721
Fax: (+86 21) 5899 7727
cn.sales@lemo.com

CHILE
TRIGITAL Ltda.
Av. Nueva Providencia 1881 - Of 1912
Post Code 7500520
Providencia, Santiago - Chile
Tel: 0056 2 (2) 235 08 35
Fax: 0056 2 (2) 235 08 35
info@trigital.cl

CZECH REPUBLIC
MECHATRONIC SPOL. s.r.o.
Kloknerova 9, 148 00 Praha 4
Tel: (+420 2) 679 13973
Fax: (+420 2) 679 13973
mechatronic@volny.cz

DENMARK
LEMO Denmark A/S
Gammel Mosevej 46
2820 Gentofte
Tel: (+45) 45 20 44 00
Fax: (+45) 45 20 44 01
info-dk@lemo.com

FRANCE
LEMO France Sàrl
24/28, avenue Graham Bell
Bâtiment Balthus 4, Bussy Saint Georges
77607 Marne la Vallée Cedex 3
Tel: (+33 1) 60 94 60 94
Fax: (+33 1) 60 94 60 90
info-fr@lemo.com

GERMANY
LEMO Elektronik GmbH
Hanns-Schwindt-Str. 6
81829 München
Tel: (+49 89) 42 77 03
Fax: (+49 89) 420 21 92
info@lemo.de

GREECE
CALAVITIS S.A.
11, Antinoros Street
116 34 Athens
Tel: (+30 210) 7248 144
Fax: (+30 210) 7291 613
technical@calavitis.gr

HUNGARY
REDEL Elektronika Kft
Nagysándor József u. 6-12
1201 Budapest
Tel: (+36 1) 421 47 10
Fax: (+36 1) 421 47 57
info-hu@lemo.com

INDIA
PT INSTRUMENTS Pvt. Ltd
204 - D, Twin Arcade
P. Box No 17436, Military Road, Marol,
Andheri (East)
Mumbai - 400 059, India
Tel: (+91 22) 2925 13 53
Fax: (+91 22) 2920 18 86
ptinst@vsnl.com

ISRAEL
AVDOR TECHNOLOGY LTD
16 Moshe Shapira St.
Rishon Lezion 75704
Tel : (+972 3) 952 02 22
Fax :(+972 3) 962 34 20
sales@avdor.com

ITALY
LEMO Italia srl
Viale Lunigiana 25,
20125 Milano
Tel: (+39 02) 66 71 10 46
Fax: (+39 02) 66 71 10 66
sales.it@lemo.com

JAPAN
LEMO Japan Ltd
2-7-22, Mita,
Minato-ku, Tokyo, 108-0073
Tel: (+81 3) 54 46 55 10
Fax: (+81 3) 54 46 55 11
lemoinfo@lemo.co.jp

NETHERLANDS / BELGIUM
LEMO Connectors Benelux
De Trompet 1060
1967 DA Heemskerk
Tel: (+31) 251 25 78 20
Fax: (+31) 251 25 78 21
info@lemo.nl

NEW ZEALAND
CONNECTOR SYSTEMS
HOLDINGS Ltd
5a Pacific Rise
Mt Wellington, Auckland
Tel: (+64 9) 580 28 00
Fax: (+64 9) 580 28 80
sales@connectorsystems.co.nz

NORWAY / ICELAND
LEMO Norway A/S
Stanseveien 6B, 0975 Oslo
Tel: (+47) 22 91 70 40
Fax: (+47) 22 91 70 41
info-no@lemo.com

PAKISTAN
ZEESHAN ELECTRONICS
#62 Khayaban-e-Jouhar
Sector I - 10/3
Islamabad 44000
Tel: (+92 51) 444 99 45
Fax: (+92 51) 444 99 48
zain.sheikh@zeeshanelectronics.com

POLAND
SEMICON
43, Zwolenska St., 04-761 Warsaw
Tel: (+48) 22 615 64 31
Fax: (+48) 22 615 73 75
info@semicon.com.pl

RUSSIA
SCS
PO Box 27, Moscow, 115551
Krzhizhanovskogo str., 14, build. 3
Moscow, 117218, Russia
Tel: (+7 495) 223-4638 (multi-channel)
(+7 495) 997-6067
Fax: (+7 495) 223-4638
info@lemo.ru

SINGAPORE
LEMO Asia Pte Ltd
4 Leng Kee Road, #06-09 SiS Building,
Singapore 159088
Tel: (+65) 6476 0672
Fax: (+65) 6474 0672
sg.sales@lemo.com

SOUTH AFRICA
JAYCOR INTERNATIONAL (PTY) Ltd
Head Office, Sandgate Park,
16 Desmond Street, Eastgate Ext. 9
Sandton, Johannesburg
Tel: +27 11 444 1039
Fax: +27 11 444 1311
jeff@jaycor.co.za

SOUTH KOREA
SUNG SHIN I&C CO., Ltd
#2-801, Lotte IT Castle, 550-1,
Gasan-Dong, Geumcheon-Gu,
Seoul, 153-803, Korea
Tel: (+82 2) 2026 8350
Fax: (+82 2) 2026 8360
mail@sung-shin.com

SPAIN / PORTUGAL
IBERLEMO SAU
Brasil, 45, 08402 Granollers, Barcelona
Tel: (+34 93) 860 44 20
Fax: (+34 93) 879 10 77
info-es@lemo.com

SWEDEN / FINLAND
LEMO Nordic AB
Mariehällsvägen 39A
168 65 Bromma
Tel: (+46 8) 635 60 60
Fax: (+46 8) 635 60 61
info-se@lemo.com

SWITZERLAND
LEMO Verkauf AG
Grundstrasse 22B
6343 Rotkreuz
Tel: (+41 41) 790 49 40
Fax: (+41 41) 790 49 43
ch.sales@lemo.com

TAIWAN
EVERHARMONY ENTERPRISE Inc
P.O. Box 96-47 Taipei
26, Lane 63,
Tung Hwa South Rd sec. 2,
Taipei, Taiwan, R.O.C.
Tel: (+886 2) 27 07 00 69
Fax: (+886 2) 27 02 47 23
ever.harmony@msa.hinet.net

TURKEY
MAK SAVUNMA LTD STI
Baskent Oto Galericileri Sitesi
668. SOK No 9, Ergazi - Ankara
06820 Turkey
Tel: (+90 312) 256 16 06
Tel: (+90 312) 257 13 06
Fax: (+90 312) 256 15 41
sales@maksavunma.com

UKRAINE
U.B.I.
Mr. Ivan Baryshnikov
Layosha Gavro str., 17a, appt. 50 04211,
Kiev, Ukraine
Tel: (+380 44) 568-5765
Fax: (+380 44) 568-5779
info@lemo.ua

UNITED KINGDOM
LEMO UK Ltd
12-20 North Street
Worthing
West Sussex, BN11 1DU
Tel: (+44 1903) 23 45 43
Fax: (+44 1903) 20 62 31
lemouk@lemo.com

USA
LEMO USA Inc
P.O. Box 2408
Rohnert Park, CA 94927-2408
Tel: (+1 707) 578 88 11
(+1 800) 444 53 66
Fax: (+1 707) 578 08 69
info-US@lemo.com

No reproduction or use without express permission of editorial or pictorial content, in any manner.
LEMO reserve the right at all times to modify and improve specifications without any notification.

Printed in Switzerland, july 2000 © LEMO SA
Updated March 2016