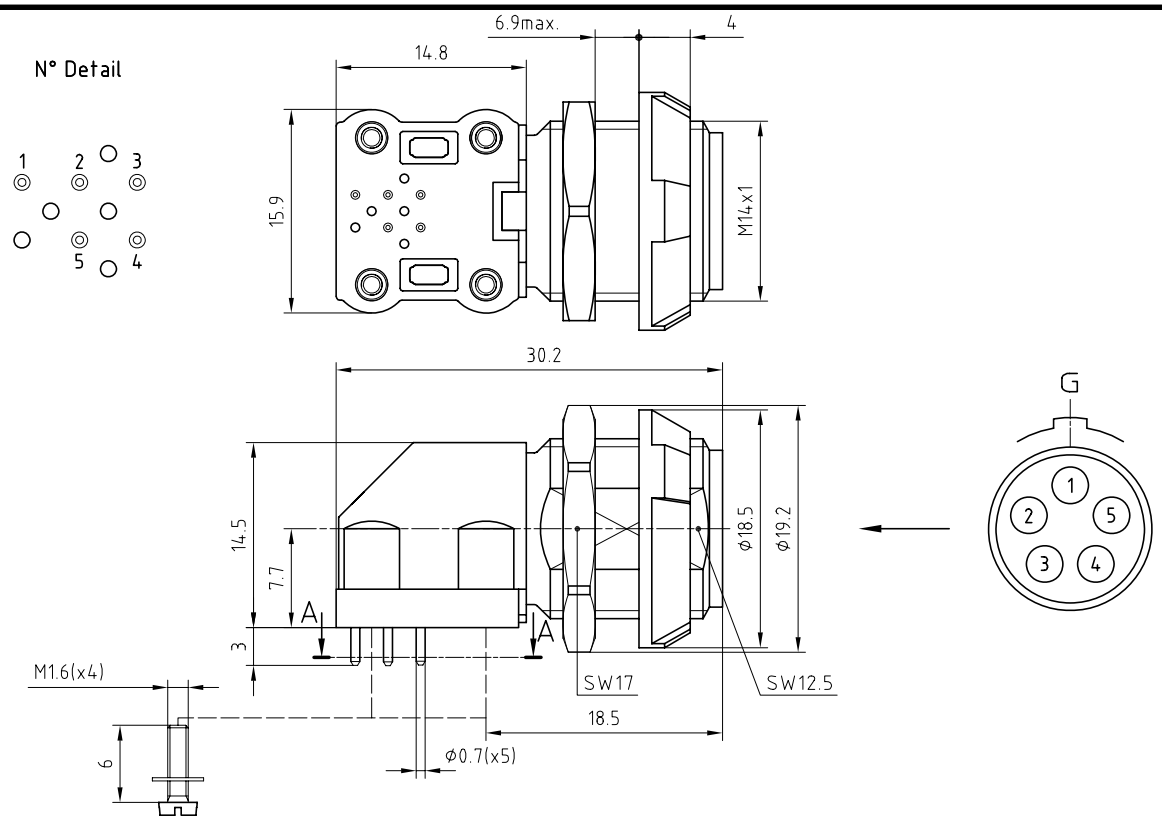

Outer shell	: PSU	Grey
Conical flange	: PSU	Grey
Insulator	: PSU	Grey
Female contact	: Bronze (UNS C54400)	Gold plated (ISO 4523)
Screw	: Steel	Zinc plated
Spring washer	: Steel	Zinc plated
Hexagonal nut	: Brass (UNS C38500)	Nickel plated (FS-QQ-N-290A)
Other insulating part	: PEEK	-
Other metallic part	: Brass (UNS C38500)	Nickel plated (FS-QQ-N-290A)

Panel cut-out

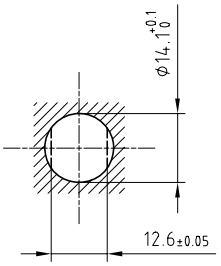

Torque for mounting nut : 1.5 Nm

A-A cross-section (PCB drilling pattern)

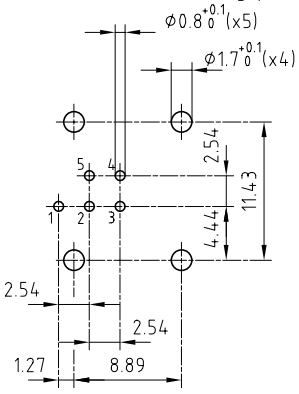

(x) For screw M1.6x0.35 tightening torque value : 6 to 7 Ncm

-

Elbow socket (90°) with two nuts , with key (G) , for PCB . Screw fixing . (Back panel mounting) . Series 1P , multipole (5)

Etude N° E6325-E6352

Echelle			
—	Dessiné	06.06.07	OVU / RMO
	Contrôlé	05.11.08	RMO / CDE
	Ref.CAO		/
	Modif.	01	05.11.08 / OVU

REDEL sa CH-1450 Ste-CROIX

PXG.M0.5GG.NGS