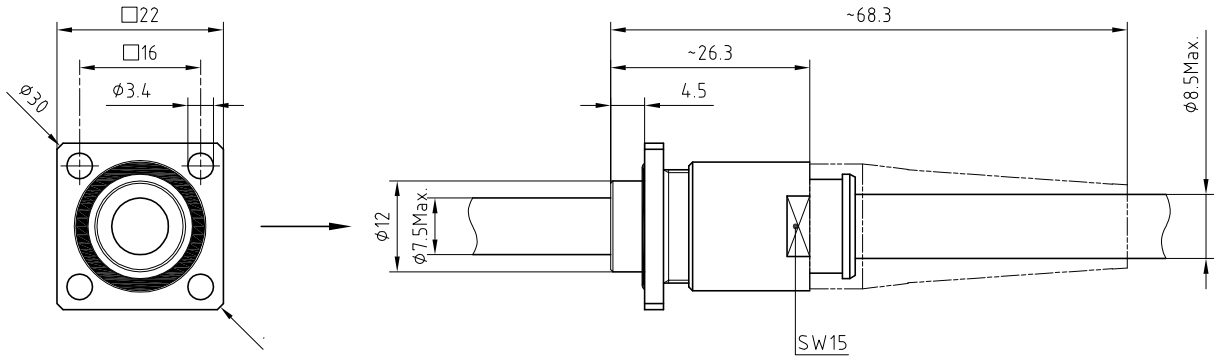

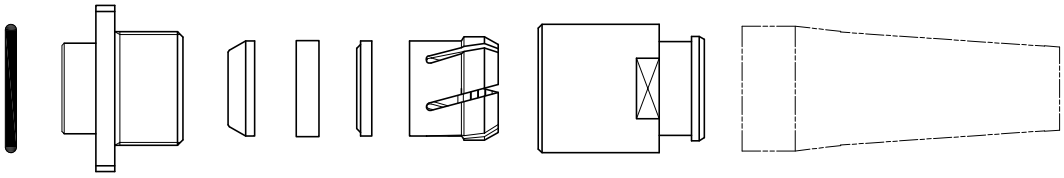

Outer shell	: Brass (UNS C38500)	Nickel plated (FS-QQ-N-290A)
Collet nut	: Brass (UNS C38500)	Nickel plated (FS-QQ-N-290A)
Earthing cone	: Brass (UNS C38500)	Nickel plated (FS-QQ-N-290A)
Gland	: SI	-
Ring	: Brass (UNS C38500)	Nickel plated (FS-QQ-N-290A)
Collet	: Brass (UNS C38500)	Nickel plated (FS-QQ-N-290A)
O-Ring	: Silicone (MVQ)	-
Bend relief	: Polyurethane	Various colors

Panel cut-out

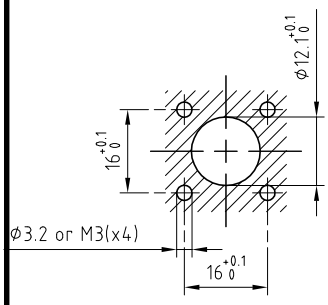

Lead-through with cable collet .
Series 3E

ETUDE N° E6351-E6040-E6041

Echelle			
—	Dessiné	11.10.2017	OVU / NHA
	Contrôle	11.10.2017	NHA / ATVI
	Modif.	00	11.10.2017 / OVU

LEMO SA
Chemin des Champs-Courbes 28
1024 Ecublens - SWITZERLAND
Tel. (+41 21) 695 16 00
email : info@lemo.com
www.lemo.com

GSC.3E.290.ND85Z