All dimensions are in millimeters (mm)

Alignment Key
Front View

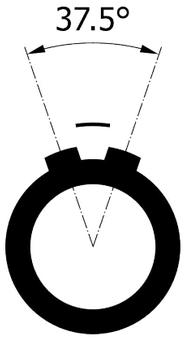

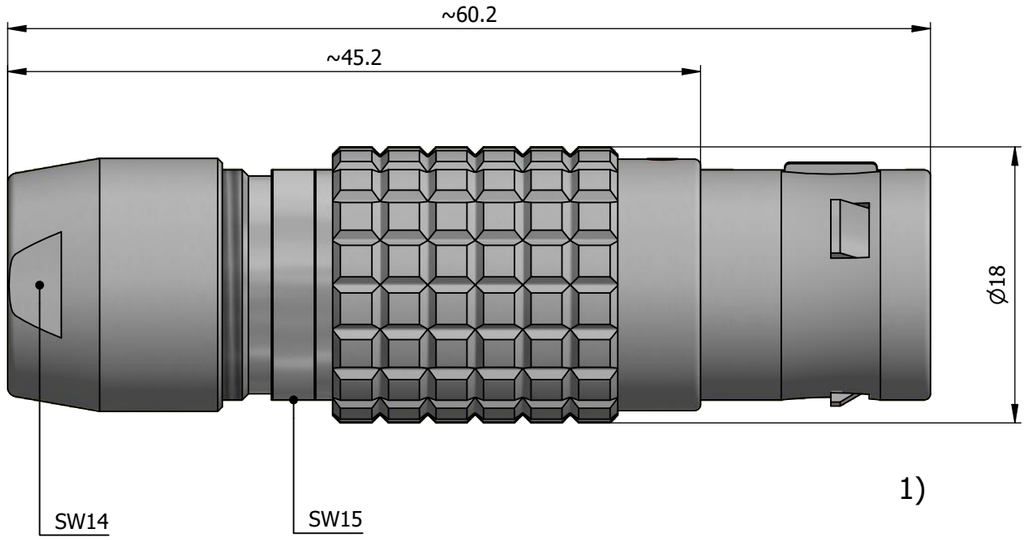

Insert Configuration
Rear View

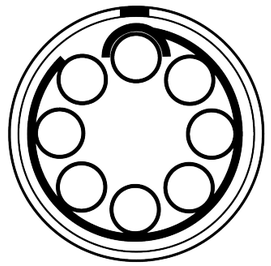

Note:

1) This picture is generic and for illustrative purposes only, and may show different keying, materials, colour, finish, and contact configuration. Minor shape or feature variations to actual item may be present.

All additional information are documented on the datasheet (See below link or QR Code)
www.lemo.com/pdf/FGJ.3B.308.CYMD11.pdf

Model | Alignment Key | Series | Insert Config. | Housing | Insulator | Contact | Collet Type | Cable Ø | Variant

FGJ.3B.308.CYMD11

Datasheet

Straight plug, cable collet
Series 3B

LEMO SA
Chemin des Champs-Courbes 28
1024 Ecublens - SWITZERLAND
Tel. (+41 21) 695 16 00
email : info@lemo.com
www.lemo.com

Drawn	12.01.2022	MARI/MARI
Checked	12.01.2022	OBAR
Modified	00	12.01.2022/MARI
DO NOT SCALE DRAWING		

CD

FGJ.3B.308.CYMD11