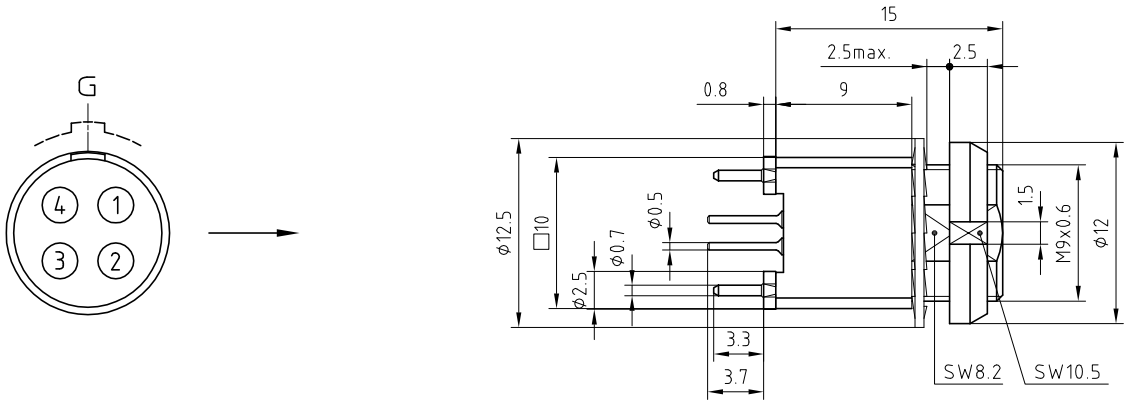

Outer shell	: Brass (UNS C38500)	Chrome plated (FS-QQ-C-320B)
Earthing crown	: Bronze (UNS C54400)	Nickel plated (FS-QQ-N-290A)
Insulator	: PEEK	-
Female contact	: Bronze (UNS C54400)	Gold plated (ISO 27874)
Ground pin	: Brass (UNS C38500)	Gold plated (ISO 27874)
Notched nut	: Brass (UNS C38500)	Chrome plated (FS-QQ-C-320B)
Locking washer	: Bronze (UNS C52100)	Nickel plated (FS-QQ-N-290A)
Other metallic part	: Brass (UNS C38500)	Nickel plated (FS-QQ-N-290A)

Panel cut-out

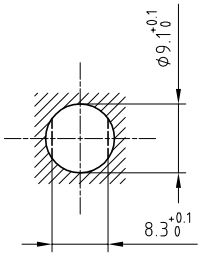

Torque for mounting nut : 2.5 Nm

PCB drilling pattern

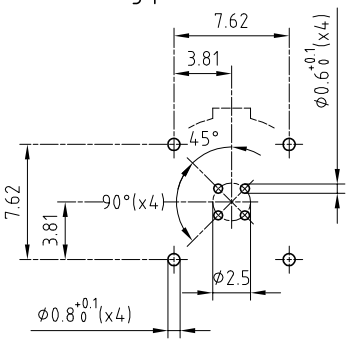

Spanner for notched nut : DCH.91.121.PA

Fixed socket (with ground pins) nut fixing , with key (G) , for PCB . (Back panel mounting) .
Series 0B , multipole (4)

ETUDE N° E2589-E1214

Echelle	Dessiné	25.10.2011	OVU / JPBA
—	Contrôle	11.02.2015	NHA / ATVI
	Modif.	01	11.02.2015 / OVU

LEMO SA CH-1024 Ecublens

EYG.0B.304.CLNG