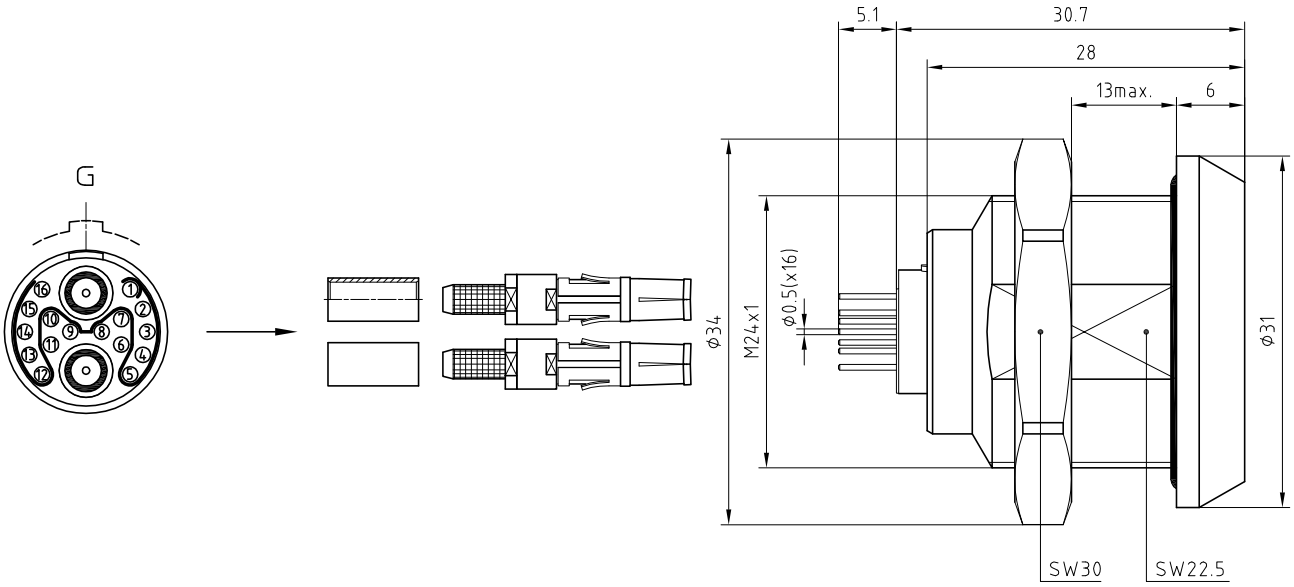

Outer shell	: Brass (UNS C38500)	Chrome plated (FS-QQ-C-320B)
Earthing crown	: Brass (UNS C38500)	Nickel plated (FS-QQ-N-290A)
Insulator	: PEEK	-
Female contact	: Bronze (UNS C54400)	Gold plated (ISO 4523)
Other metallic parts	: Brass (UNS C38500)	Nickel plated (FS-QQ-N-290A)
O-rings	: Silicone (MVQ)	-
Female coaxial contact	**: (PSS.2B.250.ZTME30)**	**(See customer drawing)**

Panel cut-out

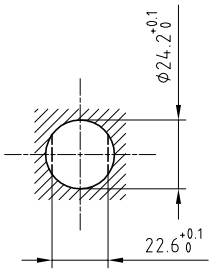

Torque for mounting nut : 12 Nm

PCB drilling pattern

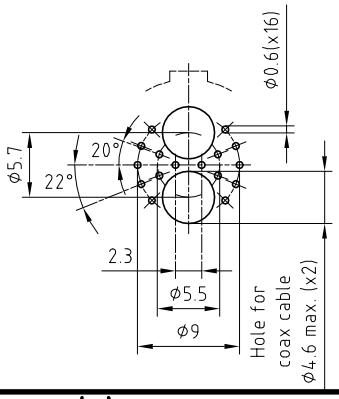

Fixed socket , with nut , with key (G) ,
for PCB . (Cable group 1)
Series 3K , 2coax50 Ω(typeC)+ 16LV(ϕ0.7)

ETUDE N° E6041-E1936B

Echelle	Dessiné	07.12.2006	OVU / RMO
—	Contrôle	14.10.2010	JPBA/ATVI
	Modif.	02	14.10.2010/ OVU

LEMO SA CH-1024 Ecublens

EGG.3K.856.CLN1