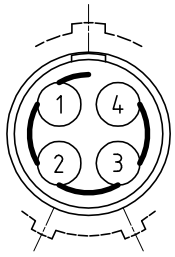

S

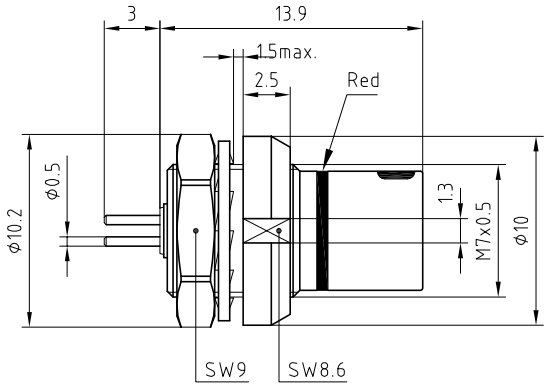

Outer shell	: Stainless steel (AISI303)	-
Earthing crown	: Cu-Be (UNS C17300)	Nickel plated (FS-QQ-N-290A)
Insulator	: PEEK	-
Male contact	: Brass (UNS C38500)	Gold plated (ISO 4523)
Notched nut	: Stainless steel (AISI304L)	-
Locking washer	: Bronze (UNS C52100)	Nickel plated (FS-QQ-N-290A)
Other metallic part	: Brass (UNS C38500)	Nickel plated (FS-QQ-N-290A)

Panel cut-out

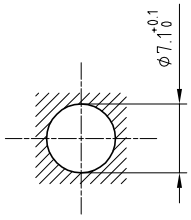

Torque for mounting nut : 0.25 Nm

PCB drilling pattern

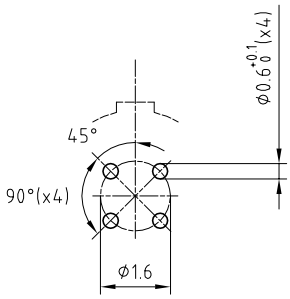

Spanner for notched nut : DCH.91.101.PA

Fixed socket , with two nuts , with keys (S)
for PCB . (Back panel mounting) .
Series FF , multipole (4)

ETUDE N° E4096

Echelle			
—	Dessiné	29.08.2012	OVU / JPBA
	Contrôle	29.08.2012	JPBA/ATVI
	Modif.	00	29.08.2012/ OVU

LEMO SA CH-1024 Ecublens

ECS.FF.304.SLD