All dimensions are in millimeters (mm)

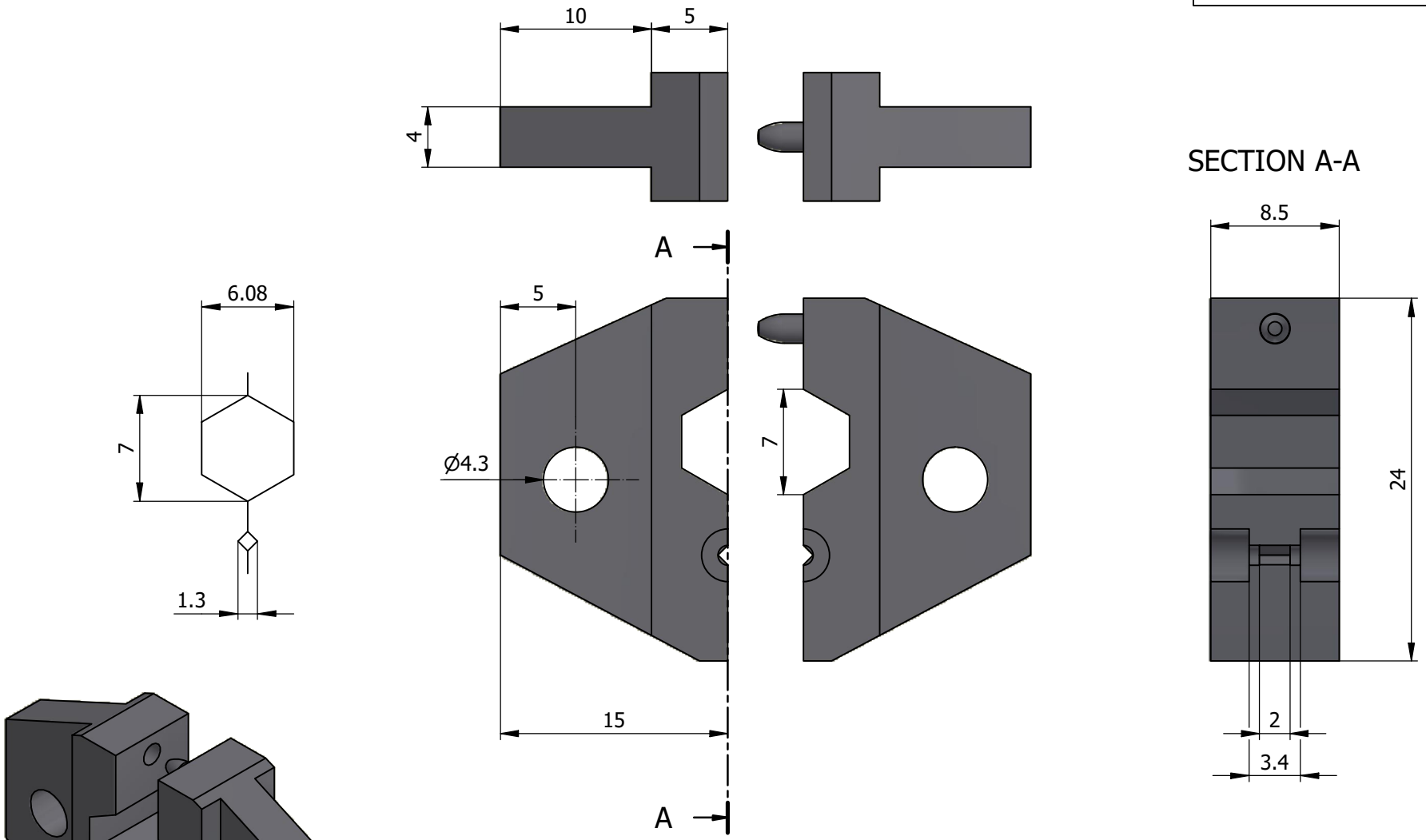

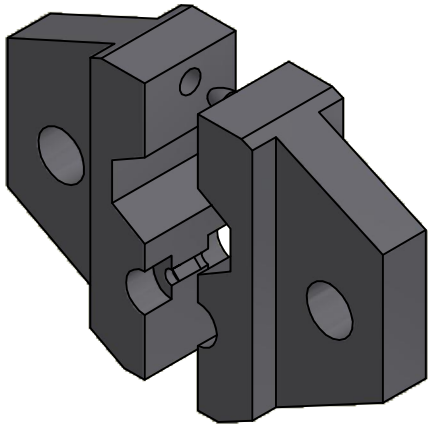

Crimping dies sub-assembly

For DPE.99.000.00

Drawn	23.09.2025	TCIT / OBAR
Checked	23.09.2025	OBAR
Modified	00	23.09.2025 / TCIT
	DO NOT SCALE DRAWING	

LEMO SA
Chemin des Champs-Courbes 28
1024 Ecublens - SWITZERLAND

Tel. (+41) 21 695 16 00
email : info@lemo.com
www.lemo.com

CD

DPN.99.127.0K