All dimensions are in millimeters (mm)

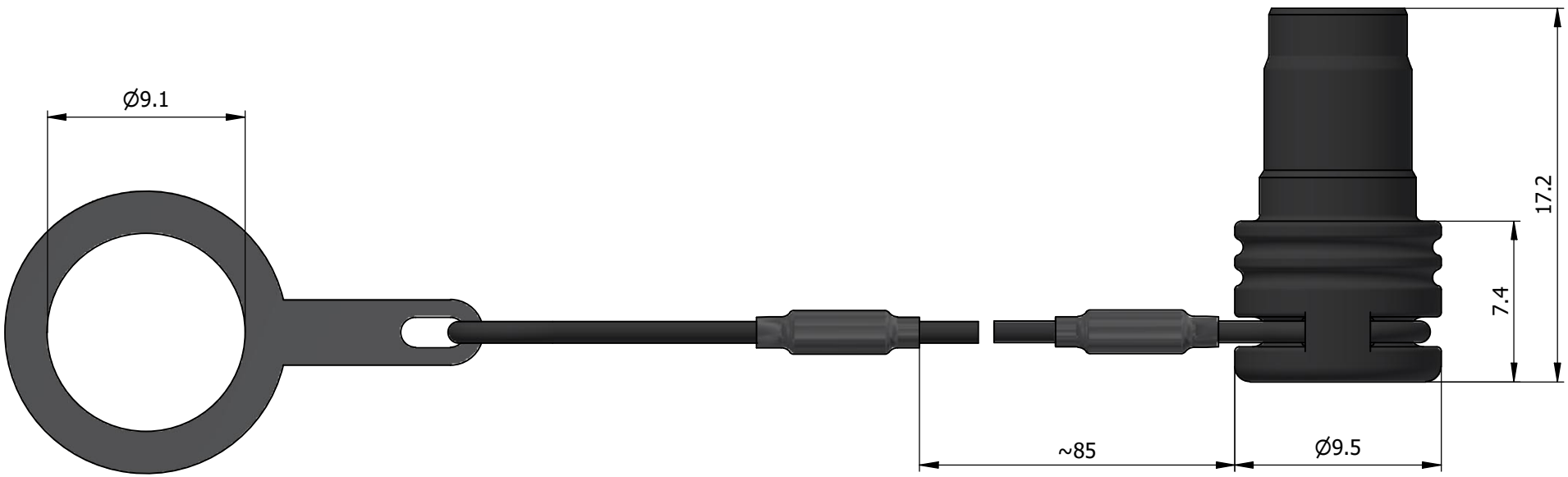

All additional information are documented on the datasheet (See below link or QR Code)
www.lemo.com/pdf/BRZ.0D.200.SCN.pdf

Datasheet

Blanking caps for sockets

Series 0D

Drawn	26.08.2025	MARI / OBAR
Checked	26.08.2025	OBAR
Modified	00	26.08.2025 / MARI
	DO NOT SCALE DRAWING	

LEMO SA
Chemin des Champs-Courbes 28
1024 Ecublens - SWITZERLAND
Tel. (+41 21) 695 16 00
email : info@lemo.com
www.lemo.com

CD

BRZ.0D.200.SCN